sCO2-4-NPP: Innovative sCO2-Based Heat Removal Technology for an Increased Level of Safety of Nuclear Power Plants

Deliverable 4.7

Qualification methodology for Heat Exchanger and turbomachinery according to NPP requirements

Work programme topic addressed: NFRP-2018-10: Encouraging innovation in nuclear safety for the benefit of European citizen

Type of action: Innovation action

Grant Agreement number: 847606

Start date of project: 1 September 2019 Duration: 36 months

Lead beneficiary of this deliverable: FIVES

Due date of deliverable: 30/06/2022 Actual submission date: 31/08/2022

Version #: R1.0

Type		
R	Document, report excluding the periodic and final reports	X
DEM	Demonstrator, pilot, prototype, plan designs	
DEC	Websites, patents filing, press & media actions, videos, etc.	
OTHER	Software, technical diagram, etc.	
Dissemination level		
PU	PUBLIC, fully open, e.g. web	X
CO	CONFIDENTIAL, restricted under conditions set out in Model Grant Agreement	

This project has received funding from the Euratom research and training programme 2014-2018 under grant agreement No 847606. This document and its contents remain the property of the beneficiaries of the sCO2-4-NPP Consortium and may not be distributed or reproduced without the express written approval of the Coordinator, EDF.

Revision History

Release	Date	Reason for Change	Author	Distribution
R0.1	12/08/2022	Original version	Sarah TIOUAL-DEMANGE	All partners
R0.2	30/08/2022	Answering comments from Albannie CAGNAC and Andrej PROSEK	Sarah TIOUAL-DEMANGE	All partners
R1.0	31/08/2022	Final Version	Sarah TIOUAL-DEMANGE	Public

Deliverable Contributors

Authors

Partner	Name
FIVES	Sarah TIOUAL-DEMANGE
NP TEC	Francesco CANGIOLI

Contributors

Partner	Name
FIVES	Guillaume TAICLET
NP TEC	Carlo ARINGHIERI

Internal Reviewers

Partner	Name
EDF	Albannie CAGNAC
USTUTT	Joerg STARFLINGER

Table of contents

1 List of Acronyms 10
2 Executive Summary 13
3 Introduction 14
4 Description of sCO2-4-NPP 15
4.1 Project sCO2-4-NPP 15
4.1.1 Introduction 15
4.1.2 General presentation 15
4.1.3 Characteristics and Dimensions 16
4.1.4 Main components of Project sCO2-4-NPP 16
5 Heat exchangers qualification methodology 18
5.1 Risk analysis for CHX and DUHS 18
5.1.1 Operator's need 18
5.1.2 Equipment description 19
5.1.3 Input data required for risk analysis 28
5.1.4 Approach to risk analysis 32
5.1.5 Conclusion of the risk analysis 41
5.2 List of important activities for the protection of interest 41
5.3 List of AIP and associated Technical Controls 41
5.4 Necessary dimensions to meet the essential safety requirements 44
5.4.1 Definitions 44
5.4.2 Controls / Measurements of DNRE 46
5.5 Material 52
5.5.1 Nuclear particular material appraisal 52
5.6 Inspection and Quality Control 63
5.6.1 Note for inspections 63
5.6.2 Visual and dimensional welding control 66
5.6.3 Visual and dimensional equipment control 79
5.6.4 Thickness measurements by ultrasound procedure 85
5.6.5 Radiographic control procedure 90
5.6.6 Liquid penetrant test procedure 90
5.7 Brazing qualification proposition 97
5.8 Cleaning procedure 98

5.8.1 Requirements concerning pollution agents 99
5.8.2 Work area during and after cleaning 100
5.8.3 Mechanical cleaning 100
5.8.4 Chemical cleaning 100
5.8.5 Control of cleaning 103
5.8.6 Personnel in charge of control cleaning 103
5.8.7 Protection, storage, erection, transportation 104
5.8.8 Documentation 105
5.9 Final visual examination at the end of manufacturing 105
5.9.1 Operational staff 106
5.9.2 Examination conditions 106
5.9.3 Examination stage 107
5.9.4 Final visual control before and after hydraulic testing 107
5.10 Procedure of marking and traceability 110
5.10.1 Identification 110
5.10.2 Spare parts marking 112
5.10.3 Marking 112
5.10.4 Welds identification 114
5.10.5 Loss of traceability 115
5.10.6 Documentation 116
6 Turbomachinery qualification methodology 117
6.1 Object 117
6.1.1 Context and issues 117
6.1.2 Scope of the study 117
6.2 Structure of the report 119
6.2.1 Introduction 119
6.2.2 Structure 120
6.3 Methodology 120
6.3.1 Introduction 120
6.3.2 Method 120
6.4 Determination of subsets 121
6.4.1 Introduction 121
6.4.2 Choice of sub-assemblies 121
6.5 Identification of applicable texts 122

6.5.1 Conclusion on Conventional Regulation 123
6.5.2 Nuclear Regulation (France) 124
6.5.3 Nuclear Regulation (Czech Republic) 124
6.6 Structure of the reference 125
6.6.1 Introduction 125
6.6.2 Types of text 125
6.6.3 Presentation of regulation documents 125
6.7 Regulatory references 126
7 Conclusion 127
8 References 128
Appendix A Risk analysis tables for PP 130
A.1 Section 1: design analysis 130
A.2 Section 2: Supply and Manufacturing Analysis 142
A.2.1 Supply Analysis 142
A.2.2 Manufacturing analysis 146
A.3 Section 3: Analysis of the activities realized by the operator 154
Appendix B Risk analysis of the other elements 161
Appendix C Analysis of regulatory requirements 162
Appendix D List of DNRE 181
Appendix E Example of bilingual examination certificate 182
Appendix F Radiographic Control Procedure 183
F.1 Purpose 183
F.2 Scope 183
F.3 State of materials submitted for examination (MC3312.3 and MC3141) 183
F.3.1 Surface condition 183
F.3.2 Marking 183
F.4 Operational staff (MC8000) 184
F.5 Equipment 184
F.5.1 Radiating sources (MC 3142) 184
F.5.2 Radiographic films (MC3312.4) 185
F.5.3 Intensifying screens (MC 3133 - MC 3146.2) 185
F.5.4 Anterior filter (MC 3134 - MC 3147) 186
F.5.5 Posterior filter (blocking) (MC 3135 - MC 3148 - MC 3312.5.3) 186
F.5.6 Image quality indicators (IQI) (MC 3136 - MC 3145.2 - MC 3162.1 - MC 3312.6) 186

F.6 Terms and conditions of examination ... 187
F.6.1 Un-sharpness – geometry conditions (MC 3143 - MC 3312.5.2) ... 187
F.6.2 Operating modes (MC3312.5) ... 188
F.6.3 Operating techniques ... 188
F.7 Review of results ... 191
F.7.1 Radiography quality ... 191
F.7.2 Areas under examination (S7700) ... 192
F.7.3 Examination of X-ray films ... 193
F.7.4 Image quality ... 194
F.7.5 Interpretation of radiograms ... 194
F.8 Criteria of acceptance of welds level 2 ... 195
F.9 Extent of control and extension ... 195
F.10 Control of repaired areas ... 195
F.11 Documentation (MC3170) ... 195
F.12 IQI table ... 196
F.13 Radiographic methods ... 197
F.14 Bilingual report template ... 203
F.15 Lengths seen from the source ... 204
Appendix G Control of cleaning and acceptance criteria ... 205
Appendix H Identification of applicable texts ... 208
H.1 French Labor ... 208
H.1.1 Introduction ... 208
H.1.2 Subjugation ... 208
H.2 Specific French regulations ... 212
H.2.1 Introduction ... 212
H.2.2 Work equipment ... 212
H.3 French Environment Code ... 213
H.3.1 Introduction ... 213
H.3.2 Subjugation ... 213
H.4 European directives / regulations ‘‘personal safety’’ ... 216
H.4.1 Presentation ... 216
H.4.2 European directives / regulation requesting CE marking ... 217
H.4.3 European User Directives, in the employer sense ... 222
H.5 European directives / regulation on the environment ... 227

H.5.1 Introduction 227
H.5.2 Synthesis 232
H.6 European regulations on the environment and chemicals 233
H.7 Radio Regulations of the International Telecommunication Union (ITU) 238
H.8 Mandatory application norms 238
Appendix I Connections between codes and directives 240
Appendix J Regulatory reference 242
Appendix K France major nuclear regulations 243
Appendix L Czech Republic major nuclear regulations 255
Appendix M Excel files from Appendices I & J 256

List of Tables

Table 1: Functional analysis table (limited to the blocks "circuit 1", ''circuit 2" & ''circuit 3'') 21
Table 2: List of permanent connections and bolted connections on pressure parts 23
Table 3: Selected materials for CHX 24
Table 4: Selected materials for DUHS 26
Table 5: Allowable temperature and pressure limits for heat exchangers design 27
Table 6: Equipment classification according to circuits properties 27
Table 7: Workshop identified loads 30
Table 8: On-site identified loads 30
Table 9: Allowable forces and torques on nozzles is to be defined by the NPP designer and supplier during the conception of the corresponding piping 32
Table 10: Tightness to be defined by the NPP designer and supplier during the conception of the corresponding piping 32
Table 11: Failure Mode Analysis 35
Table 12: DUHS ID template 52
Table 13: DUHS Bars ID template 53
Table 14: Compliance with essential safety requirements of PED, with radiological protection requirements and with complementary requirements identified in risks/hazards analysis for DUHS 53
Table 15: CHX ID template 58
Table 16: CHX bars ID template 59
Table 17: Compliance with essential safety requirements of PED, with radiological protection requirements and with complementary requirements identified in risks/hazards analysis for CHX 59
Table 18: Estimated duration of areas inspection 64
Table 19: Estimated radiological exposure for one stakeholder 66
Table 20: Maximum allowable over-thickness 69
Table 21: Alignment tolerances of the internal surfaces between parts of similar thickness 70
Table 22: Types of forbidden undercuts 71
Table 23: Tolerances for Nozzle welds, groove dimensions for fillet welds and/or nozzles and small sized nozzles 72
Table 24: Acceptable limits for concave fillet welds 78
Table 25: Cleaning tests depending on corrosion surface resistance 103

Table 26: Weld repair identification *115*
Table 27: Final table of the applicable texts of the regulatory reference frame *123*
Table 28: Ductile rupture (excessive Deformation, plastic Instability, bursting…) *130*
Table 29: Elastic or elasto-plastic instability (buckling) *132*
Table 30: Stress corrosion cracking *133*
Table 31: Pitting corrosion *135*
Table 32: Cavernous corrosion *136*
Table 33: Internal leakage between two compartments of equipment *137*
Table 34: Radiation protection – Risk related to the choice of materials *138*
Table 35: Radiation protection – Deposit risk *139*
Table 36: Radiation protection – Risk related to a design not optimized for inspection and maintenance *139*
Table 37: Radiation protection – Cleanliness risk *141*
Table 38: Supply Analysis – Case of PP (base metal) *142*
Table 39: Supply Analysis – Case of parts directly attached to PP by welding (PDA) *144*
Table 40: Supply Analysis – Case of filler metal for weld and brazing PP *145*
Table 41: Manufacturing analysis: forming, machining, welding, examination, tightening, tests, cleaning *146*
Table 42: Common activities at different life phases of the equipment, carried out under the responsibility of the operator *154*
Table 43: Installation of the equipment under the responsibility of the operator *155*
Table 44: Analysis of commissioning and use operations *157*
Table 45: Analysis of control and maintenance operations *159*
Table 46: Risk analysis for components that act as a parade *161*
Table 47: List of Essential Safety Requirements of PED Appendix I *162*
Table 48: List of Essential Safety Requirements of ESPN Appendix III *175*
Table 49: List of Essential Safety Requirements of ESPN Appendix IV *176*
Table 50: List of Essential Safety Requirements of Radioprotection guide *177*
Table 51: Applicability of French Labor Code for Project sCO2-4-NPP *210*
Table 52: French Regulation on Work Equipment *213*
Table 53: Synthesis and applicability of French Environment Code for Project sCO2-4-NPP *215*
Table 54: Applicability of European directives on personal safety for Project sCO2-4-NPP *217*
Table 55: Construction product regulation EU *221*
Table 56: CE marking directives *221*
Table 57: Applicability of European User Directives for Project sCO2-4-NPP *222*
Table 58: Synthesis of European User Directives *226*
Table 59: Applicability of European Environmental Directives for Project sCO2-4-NPP *227*
Table 60: Synthesis European Environmental Directives *232*
Table 61: Applicability of European regulations on the environment and chemicals for Project sCO2-4-NPP ... *233*
Table 62: Synthesis European Regulation on Environment and Chemicals *238*
Table 63: Applicability of Radio Regulations of ITU for Project sCO2-4-NPP *238*
Table 64: Mandatory application norms for Project sCO2-4-NPP *238*
Table 65: France major nuclear regulations *243*
Table 66: Czech Republic major nuclear regulations *255*

List of Figures

Figure 1: Schematic sketch of sCO2 System 15
Figure 2: Expander-compressor high speed generator fully hermetic and integrated in the system 17
Figure 3: sCO2 NPP cycle 19
Figure 4: Physical description of the CHX 20
Figure 5: Physical description of DUHS 20
Figure 6: List of AIP and the associated Technical Controls for the design 42
Figure 7: List of AIP and the associated Technical Controls for the procurement/subcontracting 42
Figure 8: List of AIP and the associated Technical Controls for the fabrication/erection 43
Figure 9: Tolerance interval 45
Figure 10: Code-letter to determine the number of parts to be controlled in the lot in question 48
Figure 11: Conformity of a dimension 50
Figure 12: Bilateral limit specification for common measuring devices 50
Figure 13: Unilateral limit specification for common measuring devices 50
Figure 14: Bilateral limit specification for other cases 51
Figure 15: Unilateral limit specification for other cases 51
Figure 16: Environment of the equipment [27] 64
Figure 17: Illustration of the inclusion of the thinner part to be welded between the surfaces of the thicker part 70
Figure 18: Bilingual template for visual examination test report 80
Figure 19: Bilingual template for dimension check report 81
Figure 20: Bilingual thickness measurement report template 88
Figure 21: Operational mode of test 93
Figure 22: Table of water quality 101
Figure 23: Stages of the different phases of the regulatory study 117
Figure 24: French specific regulations pyramid 118
Figure 25: Czech specific regulations pyramid 119
Figure 26: Tree structure of the determination of subsets approach 121
Figure 27: Structure of the regulation document 126

1 List of Acronyms

Abbreviation / Acronym	Description / meaning
AIP	Activities for the Protection of Interests
ASME	American Society of Mechanical Engineers
BH NP	Baker Hughes Nuovo Pignone
BNI	Basic Nuclear Installation
BPVC	Boiler and Pressure Vessel Code
BSR	Basic Safety Rules
C	Compressor
CAE	Computer Aided Engineering
CE	Conformité Européenne (European Conformity)
CHX	Compact Heat Exchanger
COFREND	Confédération Française pour les Essais Non Destructifs (French Confederation for Non-Destructive Test)
DNRE	Dimensions Nécessaires au Respect des Exigences règlementaires françaises (Necessary Dimensions to Meet the Essential Safety Requirements)
DUHS	Diverse Ultimate Heat Sink
e	Thickness
EDF	Électricité de France
EMC	Electromagnetic Compatibility
EMT	Maximal Permissible Error
ESPN	Équipement Sous Pression Nucléaire (Nuclear Pressurized Equipment)
EU	European Union
FDS	Product Safety Sheets
G	Generator
HAZ	Heat Affected Zone
HEPR	High Energy Pipe Break
HFE	Human Factors Engineering
HIS	Highly Improbable Situation
HVAC	Heating, Ventilation, and Air Conditioning
I&C	Instrumentation and Control

Abbreviation / Acronym	Description / meaning
IAEA	International Atomic Energy Agency
ICRP	International Commission on Radiological Protection
IEC	International Electrotechnical Commission
IEEE	Institute of Electrical and Electronic Engineers
INB	Installation Nucléaire de Base (Basic Nuclear Installation)
IPS	Important Supplies for Safety
IQI	Image Quality Indicator
IRSN	Institut de radioprotection et de sûreté nucléaire (Radioprotection and Nuclear Safety Institute)
ISO	International Standard Organization
IT	Tolerance Interval
ITU	International Telecommunication Union
LSI	Lower limit specification
LSS	Upper limit specification
NDT	Non-Destructive Testing
NPP	Nuclear Power Plant
NRC	Nuclear Regulatory Commission
OEM	Original Equipment Manufacturer
OJ	Official Journal
OP	Other parts
OTS	Operating Technical Specifications
PCRP	Parts Contributing to Pressure Resistance (and no PP)
PDA	Directly Attached Party (and no PCRP)
PED	Pressure Equipment Directive
PMUC	Produit et Matériaux Utilisés en Centrale nucléaire (Product and Materials Use in Nuclear Power Plant)
POP	Persistent Organic Pollutants
PP	Part under Pressure
PRPS	Primary Reactor Protection System
PSA	Probabilistic Safety Assessment
PSHA	Probabilistic Seismic Hazard Assessment

Abbreviation / Acronym	Description / meaning
PT	Liquid penetrant examination
PWR	Pressurized Water Reactor
R&D	Research and Development
Ra	Roughness
RBS	Système de Borication de Sécurité (Emergency Boration System)
RCC-M	Règles de Conception et de Construction des Matériels Mécaniques des ilôts nucléaire REP (Design and construction rules for mechanical components of PWR nuclear islands)
RCS	Reactor Coolant System
REACH	Registration, Evaluation, Authorisation and Restriction of Chemicals
RFS	Règles Fondamentales de Sûreté (Fundamental Safety Rules)
ROHS	Restriction of the use of certain hazardous substances in electrical and electronic equipment
SUBJ	Czech Nuclear Safety Authority
SV	Safety Valve
T	Turbine
TC	Technical Control
TCS	Turbo-Compressor System
TRL	Technology Readiness Level
TRS	Technical Regulations and Standards
U	Measurement Uncertainty
UIN	Unique Identification Number
US	Ultrasound
UT	Ultrasonic Testing
VFD	Variable-Frequency Drive
VT	Visual inspection method
WEEE	Waste Electrical and Electronic Equipment
WP	Work Package

2 Executive Summary

This deliverable aims to provide the overall methodology about qualification procedure for the cycle's components (heat exchangers and turbomachinery) in the nuclear environment.

For the heat exchangers part, the qualification was set according to existing regulations such as the Pressure Equipment Directive (PED) 2014/68/EU, French design code RCC-M and ASME BPVC section III design code.

Dedicated documentation was also constructed for each of the following aspects: Risk analysis, list of important activities for the protection of interest, list of AIP and associated Technical Controls, necessary dimensions to meet the essential safety requirements, materials specifications, inspection and quality control, cleaning procedure, final visual examination at the end of manufacturing and procedure of marking and traceability.

However, since the heat exchangers assembly technique is brazing, and because of the fact that this technique is not yet approved by classical regulation, a research work was achieved to suggest the possible ways and the steps to fulfil in order to validate this assembly technique for nuclear power plant applications. The main challenges are now to manage to include these propositions into a code case allowing ultimately the integration of brazing procedure in NPP regulations.

For the turbomachinery part, a thorough analysis has been performed to identify the civil and nuclear regulatory references applicable to the equipment and its auxiliaries. For each applicable text, the following information has been provided: the subsets for which the text is applicable; the type of justification or proof of conformity expected; the foreseeable gaps and deficiencies.

The results highlighted in this deliverable, along with the entire WP4 results, will constitute the inputs to WP7 for the definition of the technical roadmap to reach the expected TRL9.

3 Introduction

One of the objectives of WP4 is to plan for the qualification of the components of the sCO2-4-NPP project cycle: Heat exchangers and Turbomachinery. In fact, this deliverable clearly defines the qualification strategy for these components, regarding material requirements, manufacturing process qualification and mechanical integrity assessment.

For the heat exchangers part, the work presented in this document was achieved by applying nuclear power plants specific regulations to the designed equipment, and taking into account the regulatory and licensing requirements dedicated to nuclear power plants requirements.

The starting point was taken from deliverable 3.1, which reports the identification of the regulatory elements for design of the components and the system. For some aspects, such as brazing procedure, which is not available in NPP regulations, new suggestions and eventual propositions were applied due to the innovative sCO2-4-NPP heat exchangers design.

The major findings are relying on the Pressure Equipment Directive (PED) 2014/68/EU, French design code RCC-M and ASME BPVC section III design code.

Specific templates are available for each qualification part, applied to the specific heat exchangers design, and dedicated to be part of the manufacturer regulatory manual.

For the turbomachinery part, the work presented was also performed building up on deliverable 3.1 and exploring in deep nuclear power plants specific regulations applicable to the designed equipment, and taking into account the regulatory and licensing requirements dedicated to nuclear power plants requirements. Detailed outcome is provided in Appendix J.

Regarding the elements described above, this deliverable is completely in accordance with the initial objectives.

4 Description of sCO2-4-NPP

4.1 Project sCO2-4-NPP

4.1.1 Introduction

The sCO2-4-NPP technology will be a backup cooling system, attached to the principal steam-based cooling system, which will considerably delay or eliminate the need for human intervention (>72 hours) in case of accidents such as station blackouts, thus replying to the need for increased safety in NPPs.

The starting system is a concept using sCO2 as a working fluid and was developed in the sCO_2-HeRo project, and today the consortium aims to continue the development of the sCO_2 system and its possible integration into a nuclear power plant.

4.1.2 General presentation

Project sCO2-4-NPP is a concept of heat removal to help improve the safety of nuclear power plants in operation as well as for future ones under development. The system is designed to adapt to different technologies and types of nuclear power plant. Its design must allow it to be easily adapted to existing reactors.

The system under development will be implemented as an independent complement to existing water-based systems and will have a very compact design, which will not require any major modifications to the existing nuclear power plant infrastructure.

The sCO2-4-NPP system will safely remove heat from the reactor core through the use of several highly compact, self-propelled, self-contained, self-launching cooling system modules, each module powered by an integrated Brayton cycle (also called Joule cycle) using sCO2 as working fluid. At the time of an accident, all modules of the sCO2-4-NPP system will be operated at maximum rated power to remove residual heat.

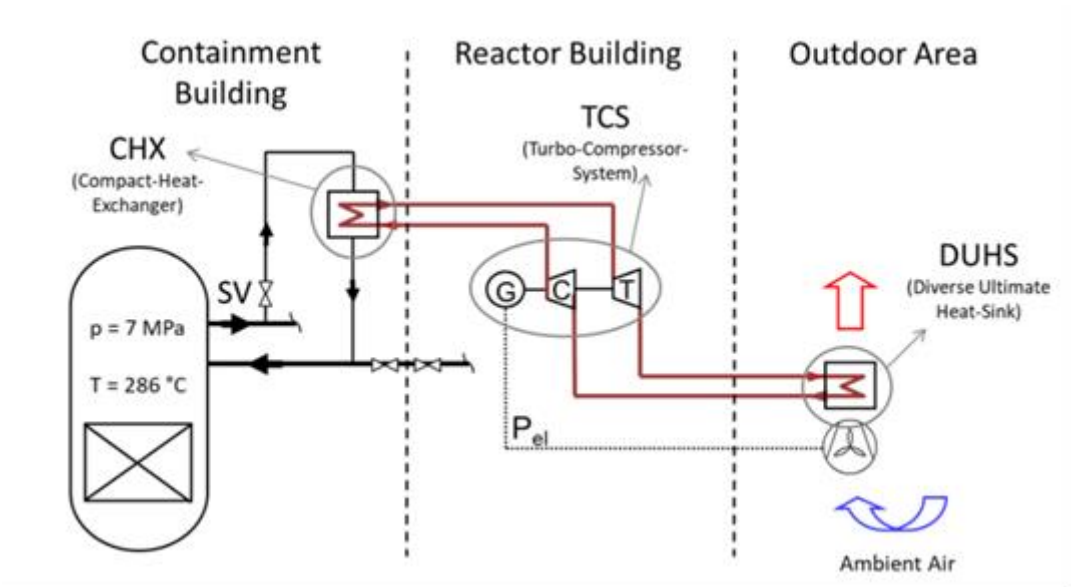

Figure 1: Schematic sketch of sCO2 System

4.1.3 Characteristics and Dimensions

The principle of the system is to obtain a technology:

- compact to integrate on different sites,
- modular with the possibility of installing one to six modules in series,
- Transportable for easy maintenance and transport of the cooling system.

The sCO2-Based Heat Removal Technology rests on four main pieces of equipment whose installation requirements determine the design of the general installation. These equipment's dimensions are as follows, for a 10 MW sCO2 module:

- 1 CHX Exchanger:
  - Length=512 mm; Width=700 mm; Height=2 000 mm
- 20 DUHS Exchanger:
  - Length=640 mm; Width=2 000 mm; Height=987 mm
- 2 CO2 Start-up Tank (for the push-up start):
  - Volume: 63 m^3
- 1 Turbomachine:
  - Length=958.98 mm; Width =1 200 mm; Height=811.2 mm

4.1.4 Main components of Project sCO2-4-NPP

4.1.4.1 CHX Heat Exchanger

The role of the heat exchanger is to transfer heat energy from one fluid to another, without mixing them. The CHX Exchanger is a Steam/CO_2 exchanger and must be installed vertically to ensure its heat exchange performance.

4.1.4.2 DUHS Heat Exchanger

The DUHS exchanger is a CO_2/Air exchanger which will allow the dissipation of the heat captured inside the unit to the outside. Therefore, it must be installed outdoors to ensure its heat exchange performance.

The 20 DUHS modules must be installed in pairs associated with the finned coolers necessary for the operation of the forced ventilation system.

4.1.4.3 CO_2 Start-up Tank

The sCO2-4-NPP system works with two 63 m^3 CO_2 tanks. The tanks are designed to be installed outdoors and will have the following dimensions:

Diameter = 2600 mm; Height = 12,000 mm.

4.1.4.4 Turbomachine

The machinery is an integrated expander-compressor high speed generator fully hermetic and integrated in the system as described by the following picture

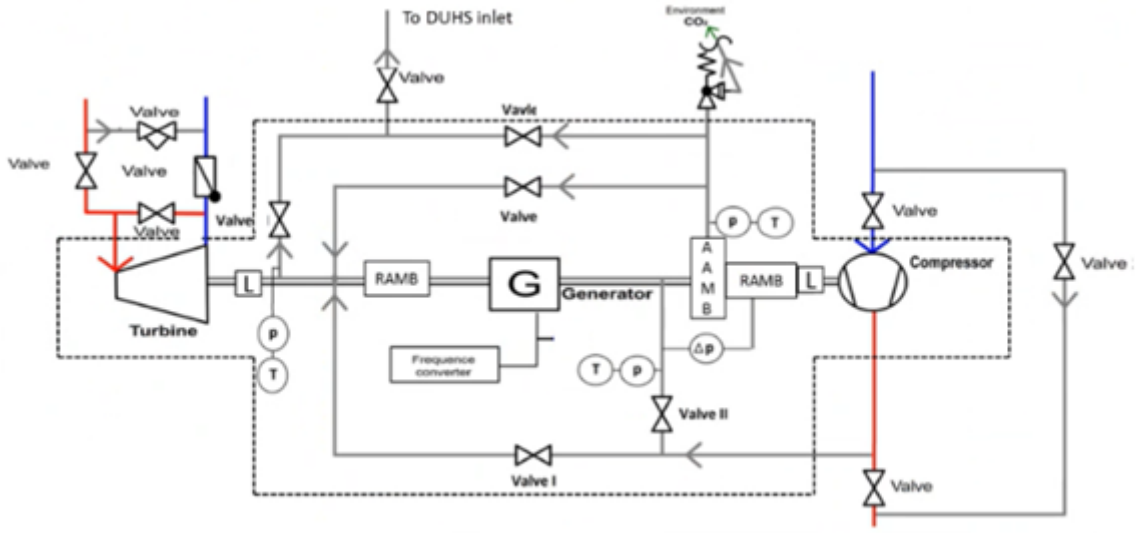

Figure 2: Expander-compressor high speed generator fully hermetic and integrated in the system

4.1.4.5 Auxiliary equipment

In order to allow the operation of the Project and its conduct, the following equipment equips the system:

- Start-up CO_2 vent
- CO_2 loop safety vents
- Electrical & Batteries cabinet
- Control & Command cabinet
- Control & Command post
- Turbomachine electrical interface

For more details see [27].

5 Heat exchangers qualification methodology

First step was to identify to which categories the heat exchangers components are attributed regarding the French NPP regulations:

- Category IV according to [1],
- ESPN level 3 according to [2],
- RCC-M 2 according to [4] and [5].

In the following, each part describes in detail the content of each document taking part of the Manufacturer Regulatory Manual to be constituted for the manufactured equipment.

5.1 Risk analysis for CHX and DUHS

This part constitutes the risks and hazards analysis carried out in accordance with Directive [1] in application of the Decree [2].

The objectives of this risk analysis for the equipment CHX and DUHS are:

- To identify the failure modes and causes of failure that would generate risks in operation due to pressure or radioactivity (dangerous phenomena),
- To look for solutions to eliminate or reduce, as far as reasonably possible, the causes of failure. These causes are to be sought in all phases of the equipment's life (design/manufacture/operation) for all design situations,
- Identify the applicable essential safety requirements for the equipment,
- To identify the residual risks / hazards,
- To prescribe requirements to the operator due to these residual risks / hazards.

The dangerous phenomena are:

- Loss of integrity and/or sealing (release of fluid, release of energy),
- Non-compliance with the radiological rules.

5.1.1 Operator’s need

Removing heat from nuclear reactors is an essential step in energy generation. The effectiveness of that process depends on many factors including the cooling agents used. The main aim of the EU-funded project sCO2-4-NPP is to introduce and commercialize innovative technology for heat removal in nuclear power plants. Technology used in the sCO2-4-NPP initiative will provide a backup cooling system, attached to the principal steam-based cooling system, which considerably delays or eliminates the need for human intervention in the case of accidents. Its compact size and the modularity of the system allows the innovative technology to be fitted into existing nuclear power plants. It can also be included in nuclear power plants under development.

This note deals with heat exchanger for this European R&D project led by EDF: a new emergency cooling system (connected to the main steam cooling system), in case of an accident in a nuclear power plant.

The needs of the operator for the heat exchanger correspond to those given in his specifications:

- Use function
- Constraints
- Recommendations, including the need for accessibility.

The details of this need are recalled as necessary in the reminder of this risk analysis. This chapter is limited to a summary reminder of the operator's needs.

The operator's need is for the development of efficient sCO2 heat removal Brayton cycle to increase the safety level in case of Nuclear Power Plants (NPP) accidents.

Lifetime for the equipment needs to be defined via specific testing in conditions similar to the sCO2-4-NPP cycle.

5.1.2 Equipment description

5.1.2.1 Physical and functional description of the equipment

The sCO2-4-NPP cycle consists of a **heat exchanger (CHX)** to the heat source, a **turbo-compressor system (TCS)** consisting of a turbine, compressor and generator, and a heat exchanger to the **diverse ultimate heat sink (DUHS)**. The sketch shows a cycle (with 2 modules), attached to a Boiling Water Reactor. In case of accident, the containment isolation valves will close and the **safety valves (SV)** will open. The steam from the generator will flow into the CHX, which must be compact in size to fit into the limited space available in existing reactor containments. Inside the CHX the CO_2 is heated up. The sCO_2 then flows through the **turbine (T)** which is located on the same shaft as the **compressor (C)** and **generator (G)**. Downstream of the turbine, the sCO_2 is cooled by means of air and is delivered to the compressor and back to the CHX.

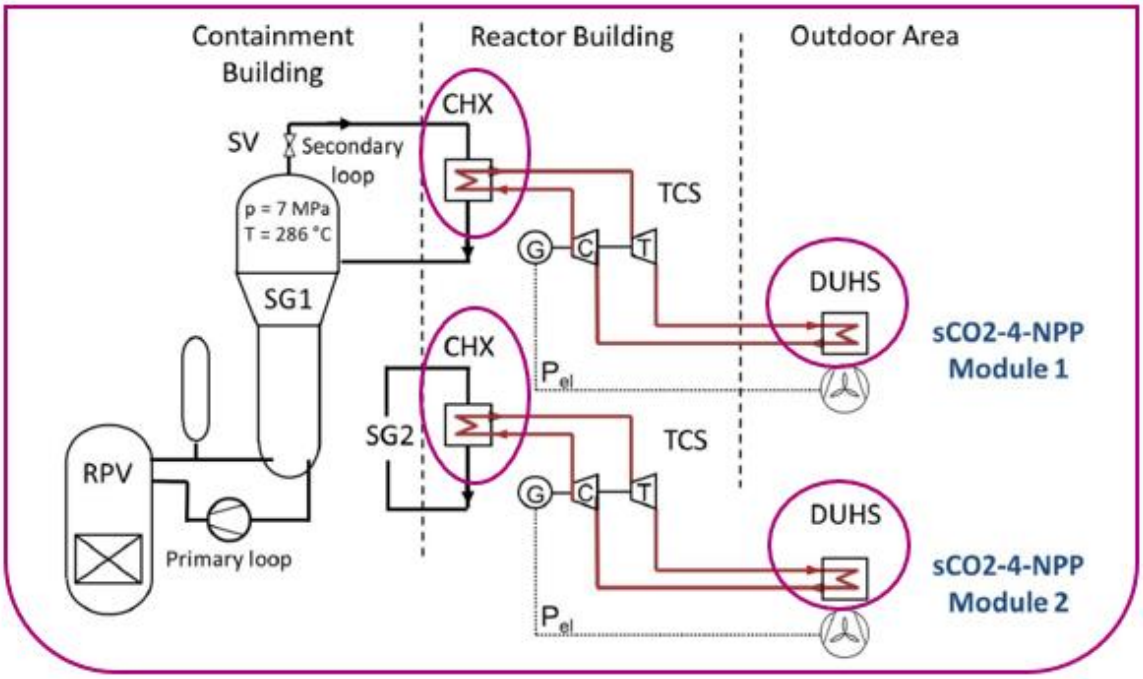

Figure 3: sCO2 NPP cycle

The system is a modular sCO2-4-NPP system attached to the secondary loop of a pressurized water reactor.

The functions of equipment are:

- Permit thermal exchanges
- Confine the fluids
- Withstand pressure and other loads.

Below is the physical description of the equipment CHX.

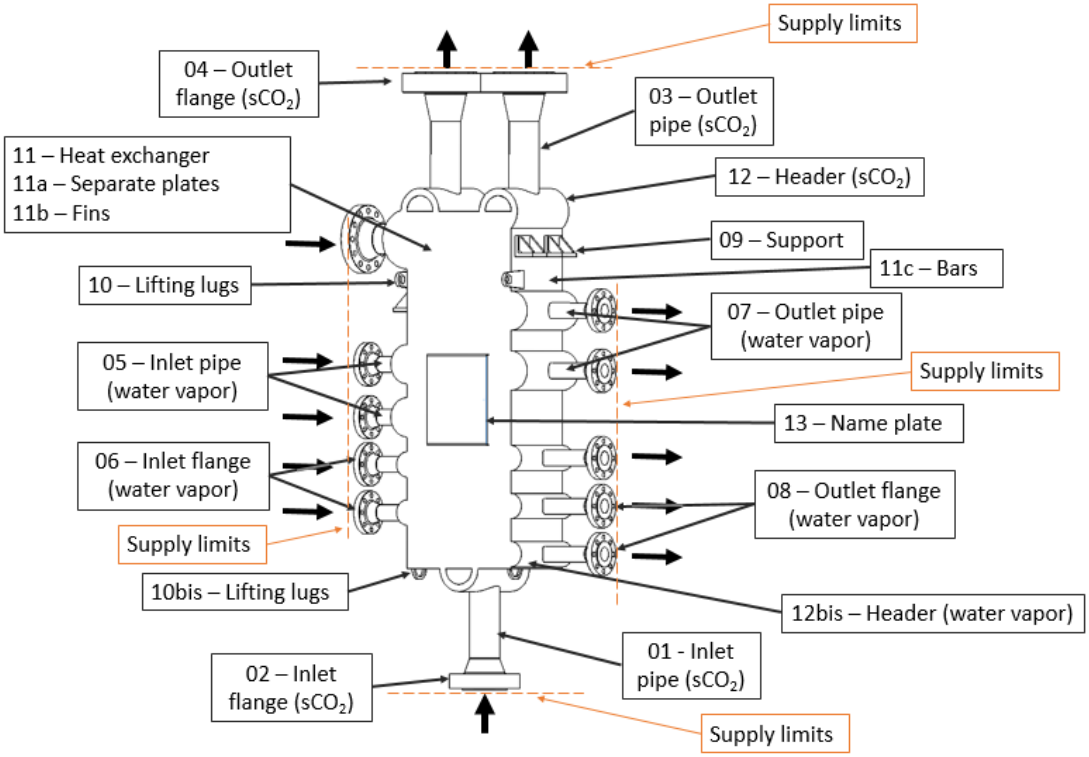

Figure 4: Physical description of the CHX

Circuit 1 fluid 1: steam (water vapor) / Circuit 2a fluid 2: sCO2.

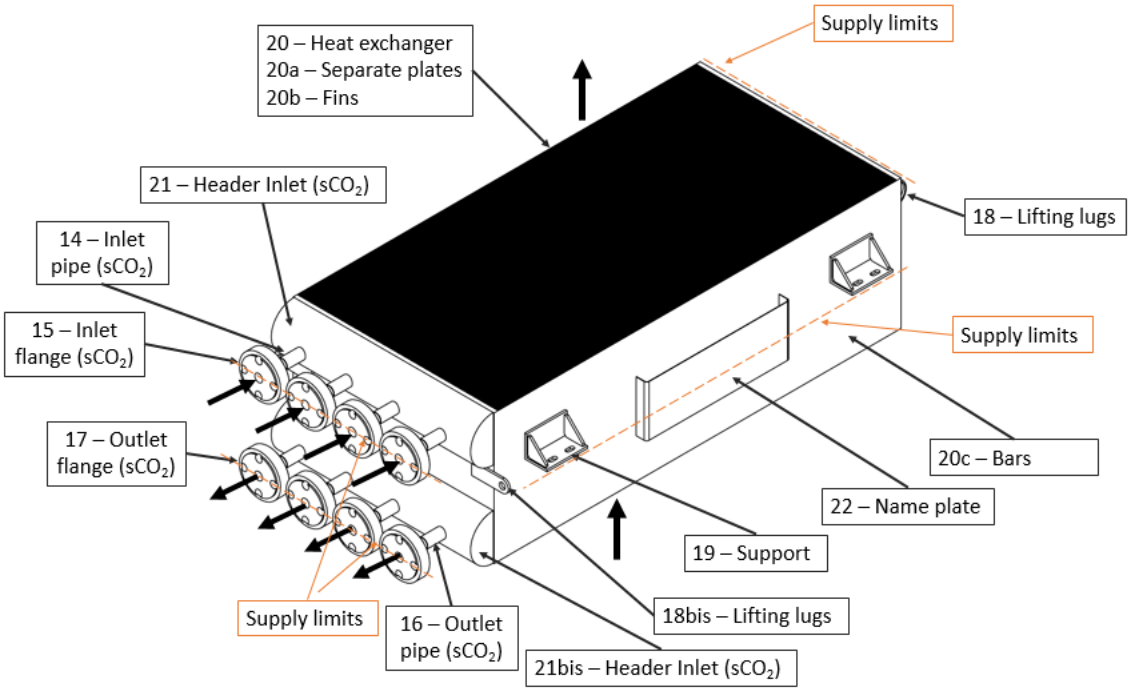

Figure 5: Physical description of DUHS

Circuit 2b fluid 2: sCO_2 / Circuit 3 fluid 3 : air

Table 1: Functional analysis table (limited to the blocks "circuit 1", "circuit 2" & "circuit 3")

Block	Part number	Designation	Function	Component classification (Part)	Part in contact with the fluid
CHX					
Circuit 2a	01	Inlet pipe (sCO2)	Inlet nozzle for fluid 2	PP	Yes
Circuit 2a	02	Inlet flange (sCO2)	Inlet nozzle for fluid 2	PP	Yes
Circuit 2a	03	Outlet pipe (sCO2)	Outlet nozzle for fluid 2	PP	Yes
Circuit 2a	04	Outlet flange (sCO2)	Outlet nozzle for fluid 2	PP	Yes
Circuit 1	05	Inlet pipe (water vapor)	Inlet nozzle for fluid 1	PP	Yes
Circuit 1	06	Inlet flange (water vapor)	Inlet nozzle for fluid 1	PP	Yes
Circuit 1	07	Outlet pipe (water vapor)	Outlet nozzle for fluid 2	PP	Yes
Circuit 1	08	Outlet flange (water vapor)	Outlet nozzle for fluid 2	PP	Yes
-	09	Supports	To maintain exchanger in service	PDA	No
-	10 / 10bis	Lifting lugs	Lifting	PDA	No

Circuits 1 and 2a	11a	Separate plates	Separates the 2 fluids	PP	Yes
Circuits 1 and 2a	11b	Fins	Ensures the heat exchanger between 2 fluids and separate the 2 fluids	PP	Yes
Circuits 1 and 2a	11c	Bars	Limit of equipment and contain the 2 fluids	PP	Yes
Circuit 2a	12	Header	Distribution / recovery of fluid 2	PP	Yes
Circuit 1	12b	Header	Distribution / recovery of fluid 1	PP	Yes
-	13	Name plate	To identify the equipment	PDA	No
DUHS					
	14	Inlet pipe (sCO_2)	Inlet nozzle for fluid 2	PP	Yes
Circuit 2b	15	Inlet flange(sCO_2)	Inlet nozzle for fluid 2	PP	Yes
Circuit 2b	16	Outlet pipe (sCO_2)	Outlet nozzle for fluid 2	PP	Yes
Circuit 2b	17	Outlet flange (sCO_2)	Outlet nozzle for fluid 2	PP	Yes
-	18 / 18bis	Lifting lugs	Lifting	PDA	No
-	19	Support	To maintain exchanger in service	PDA	No
Circuit 2b & 3	20a	Separate Plates	Ensures the heat exchanger between 2 fluids and separate the 2 fluids	PP	Yes
Circuit 2b & 3	20b	Fins	Separates the 2 fluids	PP	Yes
Circuit 2b & 3	20c	Bars	Limit of equipment and contain the 2 fluids	PP	Yes

	21 / 21bis	Headers	Distribution / recovery of fluid 2	PP	Yes
	22	Name plate	To identify the equipment	PDA	No

Table 2: List of permanent connections and bolted connections on pressure parts

Designation	Type	Classification		
		Assembly on the parts contributing to the resistance to pressure		Other
		With pressure forces	With tightness	
Assembly between pipe nozzles (01,03,05,07) and headers (12,12b)	Welded	X		X
Assembly between support (09) and heat exchanger (11)	Welded			X
Assembly between separate plates (11a), fins (11b) and bars (11c)	Brazing	X		
Assembly between pipe nozzle (01,03,05,07) and flange nozzle (02,04,06,08)	Welded	X		
Assembly between heat exchanger (11) and header (12,12b)	Welded	X		
Assembly between heat exchanger (11) and name plate (13)	Welded			X
Assembly between heat exchanger (11) and lifting lugs (10, 10bis)	Welded			X
Assembly between pipe nozzles (14, 16) and headers (21, 21bis)	Welded	X		X
Assembly between support (19) and heat exchanger (20)	Welded			X
Assembly between separate plates (20a), fins (20b) and bars (20c)	Brazing	X		

Assembly between pipe nozzle (14, 16) and flange nozzle (15, 17)	Welded	X		
Assembly between heat exchanger (20) and header (21, 21bis)	Welded	X		
Assembly between heat exchanger (20) and name plate (22)	Welded			X
Assembly between heat exchanger (20) and lifting lugs (18, 18bis)	Welded			X

Table 3: Selected materials for CHX

Component	Part number	Materials	Reference
Inlet pipe (sCO2)	01	Nickel Inconel Alloy	NC30Fe according to STR M4108 N06690 according to SB167
Inlet flange (sCO2)	02	Nickel Inconel Alloy	NC30Fe according to STR M4102 N06690 according to SB166
Outlet pipe (sCO2)	03	Nickel Inconel Alloy	NC30Fe according to STR M4108 N06690 according to SB167
Outlet flange (sCO2)	04	Nickel Inconel Alloy	NC30Fe according to STR M4102 N06690 according to SB166
Inlet pipe (water vapor)	05	Nickel Inconel Alloy	NC30Fe according to STR M4108 N06690 according to SB167
Inlet flange (water vapor)	06	Nickel Inconel Alloy	NC30Fe according to STR M4102 N06690 according to SB166
Outlet pipe (water vapor)	07	Nickel Inconel Alloy	NC30Fe according to STR M4108 N06690 according to SB167
Outlet flange (water vapor)	08	Nickel Inconel Alloy	NC30Fe according to STR M4102 N06690 according to SB166

Supports	09	Nickel Inconel Alloy	NC30Fe according to STR M4107 N06690 according to SB168
Lifting lugs	10 / 10bis	Nickel Inconel Alloy	NC30Fe according to STR M4107 N06690 according to SB168
Fins	11a	Nickel Inconel Alloy	NC30Fe according to STR M4107 N06690 according to SB168
Separate plates	11b	Nickel Inconel Alloy	NC30Fe according to STR M4107 N06690 according to SB168
Bars	11c	Nickel Inconel Alloy	NC30Fe according to STR M4102 N06690 according to SB166
Header	12	Nickel Inconel Alloy	NC30Fe according to STR M4107 N06690 according to SB168
Header	12b	Nickel Inconel Alloy	NC30Fe according to STR M4107 N06690 according to SB168
Name plate	13	Nickel Inconel Alloy	NC30Fe according to STR M4107 N06690 according to SB168

Table 4: Selected materials for DUHS

Component	Part number	Materials	Reference
Inlet pipe (sCO2)	14	Austenitic Stainless steel	Z2 CND 17-12 according to STR M3304
Inlet flange (sCO2)	15	Austenitic Stainless steel	Z2 CND 17-12 according to STR M3301
Outlet pipe (sCO2)	16	Austenitic Stainless steel	Z2 CND 17-12 according to STR M3304
Outlet flange (sCO2)	17	Austenitic Stainless steel	Z2 CND 17-12 according to STR M3301
Lifting lug	18 / 18bis	Austenitic Stainless steel	Z2 CND 17-12 according to STR M3307
Support	19	Austenitic Stainless steel	Z2 CND 17-12 according to STR M3307
Fins	20a	Austenitic Stainless steel	Z8 CNDT 18-12 according to STR M3307
Separate Plate	20b	Austenitic Stainless steel	Z2 CND 17-12 according to STR M3307
Bars	20c	Austenitic Stainless steel	Z2 CND 17-12 according to STR M3306
Header	21 / 21bis	Austenitic Stainless steel	Z2 CND 17-12 according to STR M3307
Name plate	22	Austenitic Stainless steel	Z2 CND 17-12 according to STR M3307

5.1.2.2 List of codes and standards used for design and manufacture

The codes and standards used for the design of the equipment are as follows:

- RCC-M edition 2018 (RCC-M 2), with application of calculation note for the heat exchanger,
- European standards (for the supply of materials).

5.1.2.3 Regulatory classification of equipment and allowable limits

The allowable pressure and temperature limits, for which the heat exchangers (CHX and DUHS) are designed, are as follows:

Table 5: Allowable temperature and pressure limits for heat exchangers design

	Circuit 1 (water steam)	Circuit 2a&b (sCO_2)	Circuit 3 (air)	Unit
Minimum allowable pressure (PS_{min})	0	0	0	bar
Maximum allowable pressure (PS_{max})	+90	+230	+10	bar
Minimum allowable temperature (TS_{min})	-30	-30	-30	°C
Maximum allowable temperature (TS_{max})	+300	+300	+300	°C

In accordance with Directive [1] and the ESPN Order [2], equipment is classified:

- Category IV PED

- Level ESPN N3

Table 6: Equipment classification according to circuits properties

	Fluid	Fluid group	Volume (L)	Category	classification about radiation protection	ESPN level
Circuit 1	Fluid 1: water vapor (steam) (gas)	2	250 L	IV	RP-C	N3
Circuit 2a	Fluid 2: super	1	143 L	IV	-	-

	critical CO_2 (gas)					
Circuit 2b	Fluid 2: super critical CO_2 (gas)	1	260 L	IV	-	-
Circuit 3	Fluid 3: air (gas)	2	500 L	IV	RP-C	N3

5.1.2.4 Supply and equipment limitations

The equipment (in the regulatory sense) consists exclusively of:

- PCRP (Parts contributing to pressure resistance which include PP)
- The parts directly attached to the parts contributing to the pressure resistance.

The supply consists of:

- The regulatory equipment as described above
- Other elements that are delivered with the equipment, according to a list given in 5.1.2.1 (spare parts).

The supply does not include:

- The connecting flanges on the inlet/outlet pipe side, and the other elements necessary for the connection (bolts, washers, gaskets)

- Insulation (operator's responsibility)

- The safety devices (safety valves) and the control equipment

- The foundation rods and all additional elements such as adjustment parts and bolts necessary for the installation of the equipment and its fixing on the civil engineering works.

5.1.3 Input data required for risk analysis

5.1.3.1 Situations and Loads

Loads communicated by the operator: Normal Operating conditions

Nominal operation, circuit 1 (normal situations):

- Temperature of circuit 1 (water vapor):
  - Input +296.58 °C
  - Output +150 °C
- Pressure (input, output): +81.8 bar
- Flowrate (input, output): 4.72 kg/s

- Temperature of circuit 2a (sCO_2):
  - Input +82.66 °C
  - Output +286.57 °C
- Pressure (input, output): +201.8 bar
- Flowrate (input, output): 30.49 kg/s

Transitional (normal situations) and gradient to be considered for the specified life: To be defined

Design temperature Tc = 300 °C for both sides.

Design pressure Pc = 90 bar for circuit 1.

Design pressure Pc = 230 bar for circuit 2a.

Nominal operation, circuit 1 (normal situations):

- Temperature of circuit 2b (sCO_2):
  - Input +238.66 °C
  - Output +55 °C
- Pressure (input, output): +119.2 bar
- Flowrate (input, output): 30.49 kg/s

- Temperature of circuit 3 (air):
  - Input +45 °C
  - Output +115.22 °C
- Pressure (input, output): +1 bar
- Flowrate (input, output): 132.49 kg/s

Transitional (normal situations) and gradient to be considered for the specified life: To be defined

Design temperature Tc = 300 °C for both sides.

Design pressure Pc = 230 bar for circuit 2b.

Design pressure Pc = 10 bar for circuit 3.

Loads communicated by the operator: HIS (Highly Improbable Situation)

Equipment must ensure the exchange function in accident and post-accident situations. For these situations, the operator requires compliance with the RCC-M criteria.

The pressures and temperatures to be considered for circuit 1, circuit 2a&b and circuit 3 are as follows:

- Operating conditions steam:
  - Maximum pressure: 81 bar
  - Maximum temperature: +300 °C

- Operating conditions sCO_2 (super critical CO_2):
  - Maximum pressure (2a): 201 bar
  - Maximum pressure (2b): 132 bar
  - Maximum temperature: +280 °C

- Operating conditions air:
  - Maximum pressure: 1 bar
  - Maximum temperature: +81 °C

Other loads identified by the manufacturer

Workshop hydraulic test (horizontal position with consideration of hydrostatic pressure):

Number of cycles: 1

Table 7: Workshop identified loads

	Unit	Circuit 1	Circuit 2a	Circuit 2b	Circuit 3
Temperature	°C	From +10 to +20	From +10 to +20	From +10 to +20	From +10 to +20
Internal pressure	bar	129	329	349	16

Hydraulic test on site (site position):

Number of cycles: < 6 for CHX and <5 for DUHS

Table 8: On-site identified loads

	Unit	Circuit 1	Circuit 2a	Circuit 2b	Circuit 3
Temperature	°C	From +10 to +20	From +10 to +20	From +10 to +20	From +10 to +20
Internal pressure	bar	According to regulation (< 129)	According to regulation (< 329)	According to regulation (<349)	According to regulation (<16)

Handling in vertical and horizontal position.

5.1.3.2 Aggression

Operator's need

Earthquake:

- Normal operating situation: Operating Basis Earthquake with X % damping (0.2 g) to be defined according to the NPP site, according to the operator's input data, to be combined with normal operating situations (criterion B according to C3150 of the RCC-M)
- Normal operating situation: Design Basis Earthquake with X % damping (0.2 g) to be defined according to the NPP site, according to the operator's input data (criteria C according to C3150 of the RCC-M).

Exclusion

After consultation with the operator, the following aggressions will not be considered in the risk analysis:

- Water hammer
- Migrating bodies introduced by fluids
- Unstable, flammable, or explosive fluid
- Icing
- Lightning
- Flood
- Fire for the equipment
- Wind, snow
- Ageing of the material by neutron irradiation

5.1.3.3 Environmental conditions

Environmental chemistry

The chemical specifications applicable to circuit 1 or circuit 2a&b or circuit 3 in the various operating regimes (normal operating conditions) are given in the client specification and summarized below:

For circuit 1:

- Water vapor steam (vapor and/or liquid)

For circuit 2a&b:

- Presence of diphasic and pure supercritical CO_2

For circuit 3:

- Ambient air (vapor and/or liquid) with 78.11 N – 20.93 O – 0.96 Ar

Ambient condition

The exchanger CHX is installed inside building and the exchanger DUHS is installed outside. The ambient conditions are as follows:

- Normal operating conditions:

External pressure: 1.013 bar.

External temperature: (-37 to +44) °C

Humidity: (50 – 80) %

- SHI (Highly improbable situation)

External pressure: 1.083 bar.

External temperature: (-58.1 to +48) °C

Humidity: 100 %.

In case of the DUHS, loads wind and snow according to customer specification and feedback and / or Eurocodes.

In operation, equipment will be insulated with a system for fixing the insulation without permanent connection to the equipment (supply and installation of the insulation under the responsibility of the operator).

Radiological *data*

Specific activity:

- Circuit 1: 0 MBq/m³
- Circuit 2a&b: 0 MBq/m³
- Circuit 3: 0 MBq/m³

5.1.3.4 Internal / External corrosion

Corrosion / erosion: 0.50mm for all parts (except fins) of the 2 circuits sides

Corrosion / erosion: 0.00mm for fins.

No coating on equipment.

5.1.3.5 Interfaces conditions

Compliance with allowable forces and torques on nozzles is to be defined by the nuclear designer and supplier during the conception of the corresponding piping according to the following.

Table 9: Allowable forces and torques on nozzles is to be defined by the NPP designer and supplier during the conception of the corresponding piping

FORCES & TORQUES BY NOZZLE	Fx (N) Axial	Fy (N) Shear 1	Fz (N) Shear 2	Mx (N.m) Torsion	My (N.m) Bending 1	Mz (N.m) Bending 2
Inlet Nozzle circuit 1	-	-	-	-	-	-
Outlet Nozzle circuit 1	-	-	-	-	-	-
Inlet Nozzle circuit 2a	-	-	-	-	-	-
Outlet Nozzle circuit 2a	-	-	-	-	-	-
Inlet Nozzle circuit 2b	-	-	-	-	-	-
Outlet Nozzle circuit 2b	-	-	-	-	-	-

Compliance with tightness is also to be defined by the operator during the conception of the corresponding piping according to the following.

Table 10: Tightness to be defined by the NPP designer and supplier during the conception of the corresponding piping

TIGHTNESS BY FLANGE	(N.m)
Inlet Flange circuit 1	-
Outlet Flange circuit 1	-
Inlet Flange circuit 2a	-
Outlet Flange circuit 2a	-
Inlet Flange circuit 2b	-
Outlet Flange circuit 2b	-

With mention to bolts (diameter, grade) and gaskets specifications.

Table 9 and Table 10 will be filled according to client's instructions.

5.1.4 Approach to risk analysis

5.1.4.1 Scope of risk analysis – Life phases treated

The analysis covers the life phases of equipment:

- Design phase
- Fabrication phase:
  - Supply of materials

    - Manufacturing, which covers:
        - Forming
        - Welding / Brazing (installation of brazing metal and fusion in furnace)
        - Surface treatment in manufacturing (preparation for brazing)
        - Machining, cutting, stacking, stamping, degreasing…
        - Compression pulls, tightness
        - Examination (visual, NDT, dimensional)
        - Hydrostatic pressure test
        - Cleanliness (cleaning and cleanliness control)
        - Conditioning and packaging
- Phases under the responsibility of the operator:
    - Transport, storage
    - Installation that covers:
        - Handling,
        - Connection to civil engineering,
        - Connection to the piping circuits.
    - Operation
    - Control, maintenance, inspection, requalification.

The analysis identifies:

- The activities carried out under the responsibility of the manufacturer (which, for the exchanger go up to the packaging for transport);
- The activities carried out under the responsibility of the NPP designer and supplier (which starts at the transport). The list of these activities has been shared with the NPP designer and supplier.

5.1.4.2 Organization of risk analysis

The analysis covers the entire supply as described in §4.1.

The organization of the risk analysis is given in below:

- Processing of PCRP and assemblies on PCRP (Appendix A). The assemblies of PDA to the PCRP and PDA are analysed with the PCRP as these assemblies should not create a risk on the PCRP.
- The treatment of other parts (OP) and assemblies on these parts/elements (Appendix B);
- The consideration of essential safety requirements is carried out in Appendix C, in a table distinguishing the essential safety requirements treated in a generic way, the essential safety requirements specifically treated in this risk analysis (failure mode, cause, countermeasures) and the essential safety requirements not relevant for the application case.

Examples of failure modes selected for analysis risk are the following:

- Material characteristics in the heat affected zone degraded by welding during assembly or installation
- Material characteristics degraded by fabrication (forming, welding, brazing).
- Shock or error during assembly or installation
- Problems in connecting the equipment to the interfaces
- Inadequate choice of materials
- Inadequate design
- Inadequate design / Excessive in-service inspection time / Hot spots due to activated products and/or retentions
- Inadequate design at joints
- Creation of manufacturing defects (forming, welding, brazing, environmental degradation...)
- Exceeding the operating conditions (pressure, temperature, lifetime, number of cycles, cycle amplitude...)

- Exceeding the expected commissioning conditions (pressure, temperature, vibrations...)
- Exceeding the operating or commissioning conditions (pressure, temperature, vibrations...)
- Inadequate packing and/or packaging
- Shock or fall during transport
- Error or creation of defect by impact during maintenance
- Non respect of dimensional requirements during manufacturing
- Non-compliance with dimensional requirements, material grade and/or manufacturing process during procurement
- Risk of corrosion product deposition - Formation of hot spots
- Use of inappropriate fluid during operation or commissioning…

This analysis is to be done for all phases of the equipment's life (design / manufacturing / operation), and in especially for all situations envisaged in the design.

For manufacturing, the failure mode and risk source approach are not completely appropriate, so the manufacturing risk analysis consists in identifying the technical solutions chosen to meet the essential safety requirements for this phase of the equipment's life.

Table 11: Failure Mode Analysis

According to ISO 16528-1					
N°	Designation	Yes	No	Justifications	State of risk
1	Brittle rupture		X	All analysed equipment components and filler metals (for welding and brazing) are made of Nickel Alloy (UNS06690, NC30Fe…) These materials are known to be ductile materials, not subjected to ductile/fragile transition at the conditions of use intended for this equipment. (Minimum temperature: -30 °C). According to standards defining these materials (RCC-M and ASME), the specified impact Charpy tests are not necessary until -198 °C according to UNF65 and for RCC-M 2 (impact test only on RCC-M 1 according to M4102 for example) Realization of procurement specifications for base and filler (brazing and welding) materials, nuclear PMA, welding book and brazing specification. For the operations foreseen in manufacturing (welding, brazing), the respect of the requirements of the applicable technical references, description and qualification of welding / brazing operating procedures, supervision and certification of manufacturing operations, ensures that these operations do not generate additional risks of fragility of materials and assemblies. Brittle rupture is excluded for this ESPN.	Deleted
2	Ductile rupture				See Risk analysis
	- cracking formation	X			
	- ductile pull-out due to excessive local stresses	X			
	- excessive plastic deformation,	X			

According to ISO 16528-1					
N°	Designation	Yes	No	Justifications	State of risk
	- plastic instability (burst)	X			
3	Joint leakage due to excessive deformation	X			See Risk analysis
4	Elastic or elasto-plastic instability (buckling)	X			See Risk analysis
5	Creep:			For the considered equipment, the maximum design temperature of +300 °C is much lower than the entry value in the creep range of base Nickel alloy. Creep is excluded for this ESPN.	Deleted
	- creep failure		X		
	- excessive deformation of mechanical assemblies or leading to unacceptable load transfer		X		
	- instability due to creep		X		
6	Erosion, wear, abrasion		X	Nickel alloys for base and filler metal are supplied according to recognized standards RCC-M and ASME. The Nickel alloy constituting the pressurized parts of the equipment in contact with the fluid have a high chromium proportion which reinforces the resistance to erosion. The equipment has no turbulence or fluid mixing zones. Sharp angles were limited to the design. No mechanical parts in contact that could cause wear. Since the velocity of fluids in the equipment is low, erosion is not considered. Moreover, the fluid must not contain solid particles. Erosion is excluded for this ESPN subject to the implementation of the measures prescribed by the instructions for use document [15] (provisions shall be taken by operator during installation, maintenance…of equipment). Realization of procurement specifications for base and filler (brazing and welding) materials, nuclear PMA, welding book and brazing specification.	Residual

According to ISO 16528-1					
N°	Designation	Yes	No	Justifications	State of risk
7	Corrosion				
	- Generalized		X	The filler and base Nickel alloys used in the equipment have a high chromium proportion. Nickel alloys with this minimum chromium proportion are known to have good resistance to widespread generalized corrosion. In reasonably predictable operating situations, in contact with the working fluids for internal corrosion and the atmosphere for external corrosion in all phases of equipment life, the type of alloy used is not subject to generalized corrosion. Choice of materials compliant with C2000, ZY310, S2000 and C4350 if needed. Moreover, an over-thickness is taken into account in accordance with C3171. Generalized corrosion is excluded for this ESPN subject to the implementation of the measures prescribed by the instructions for use [15], necessary to preserve it from this mode of failure (particularly, no different fluids in contact with the equipment than those identified in the instruction for use, during manufacturing and operating). If other fluids, risks analysis must be realized by operator before use. And thickness controls, non-destructive examinations must be performed periodically by the operator. Realization of procurement specifications for base and filler (brazing and welding) materials, nuclear PMA, welding book and brazing specification and cleaning procedure (RCC-M C4360).	Residual
	- Intergranular		X	The filler and base Nickel alloys constituting the pressurized parts of the equipment in contact with the fluid have a low carbon proportion which makes them insensitive to intergranular corrosion induced by chromium carbides. The nickel alloy used is insensitive to this type of corrosion. Nevertheless, materials supplied must be subjected to micrographic examination (grain size) according to RCC-M MC1000.	Deleted

According to ISO 16528-1					
N°	Designation	Yes	No	Justifications	State of risk
				Realization of procurement specifications for base and filler (brazing and welding) materials, nuclear PMA, welding book and brazing specification. Intergranular corrosion is excluded for this ESPN.	
	- Pitting	X			See Risk analysis
	- Cavernous	X			See Risk analysis
	- Stress cracking	X			See Risk analysis
	- Galvanic		X	Assemblies are made by homogeneous welding or brazing. The materials of the components assembled to constitute the equipment and the filler metals are of similar grades or without recognized risks for the application. Galvanic coupling cannot occur under these conditions. Galvanic corrosion is excluded for this ESPN.	Deleted
8	Environmental cracking	X		See Stress cracking corrosion	See Risk analysis
			X	Internal environment The operating conditions under normally predictable conditions (pressure, temperature) and the no presence of hydrogen in the fluids in contact with the equipment are not likely to generate hydrogen cracking phenomena. This phenomenon can be further reduced by controlling the internal health of the components and by limiting impurities to control inclusion cleanliness. No internal aggression is to be considered for this equipment. Internal environmental cracking is excluded for this ESPN. The instructions for use [15] prescribe the use of fluids compatible with the equipment at the different stages of its life.	Residual
9	Cycling damage				Deleted

According to ISO 16528-1					
N°	Designation	Yes	No	Justifications	State of risk
	- Progressive plastic deformation		X	This equipment is not subject to cycles (loads and operating only during accidental conditions for the power plant and during requalification pressure tests) (<6). Low operating time. Velocity of fluids taken into account in the design. Operating experience feedback on comparable equipment does not show fatigue damage. Cycling damage is excluded for this equipment ESPN.	
	- Alternate Plasticity		X		
	- Vibration risks due to circulation fluids (hydraulic excitation)		X		
	- Elastic stress fatigue (fatigue at medium and high cycle number)		X		
	- Elasto-plastic stress fatigue (low cycle fatigue)		X		
10	Environmental fatigue (external and internal)		X	This equipment is not subject to cycles (loads and operating only during accidental conditions for the power plant and during requalification pressure tests) (<6). Cycling damage due to Environmental conditions is excluded for this equipment ESPN.	Deleted
11	Ageing of materials under irradiation		X	The equipment is not exposed to the neutron flux of the reactor core. The radioactive activity in the normally foreseeable situation of the equipment can also be considered negligible from the point of view of the risk of ageing of materials subjected to ionizing radiation. No external aggression is to be considered for this equipment. Ageing of materials under irradiation is excluded for this ESPN.	Deleted
12	Release of activable products (choice of materials, cleaning, risk of deposit)	X		The release of activable products is related to erosion and corrosion failure modes. Their treatment limits the release of activable products.	See Risk analysis
13	Risk related to a design not optimized for inspection and maintenance (lack of	X			See Risk analysis

According to ISO 16528-1					
N°	Designation	Yes	No	Justifications	State of risk
	accessibility leading to overexposure to ionising radiation…)				
14	Climatic conditions and environment	X		Wind, snow, flood, rain, fire, icing, lightning and degradation due to projectile, falling objects, explosion are not taken into account as potential aggressions for the equipment. As stated in the instructions for use [15], the operator shall take into account measures against these aggressions to protect the equipment.	Residual
15	Rapid thermal fluctuation		X	Study note. Operating experience feedback on comparable equipment. Low operating time. Control of roughness to avoid surface conditions that could promote crack initiation.	Deleted / Residual

<u>State of risk:</u>

Residual = risk not eliminated due to a failure mode for the cause studied at the considered life stage

Example: alterations due to cycling = if all loads in reasonably predictable situations could be considered in the design, the risk is removed. On the other hand, it will be residual in operation, the operator having to ensure that the cycles are respected.

5.1.5 Conclusion of the risk analysis

The risk analysis presented in this section identifies the requirements that apply both heat exchanger CHX and DUHS.

5.1.5.1 Design and limits of use

The pressure and safety risks as well as the potentially radioactive character of the fluid were considered by taking into account all the situations and loads transmitted by client and the operator.

All design assumptions are explained in the calculation note to be provided by the heat exchanger manufacturer and in this section. It is the responsibility of the operator to ensure that the heat exchanger is not loaded in a way or to an extent that would exceed the situations and loads taken into account.

5.1.5.2 Safety precautions

The instruction for use informs the operator of the residual hazards identified by this analysis that could not be eliminated and indicates the appropriate measures to mitigate them, including the controls necessary to prevent them. It also informs the operator of the risks of misuse that could not be eliminated.

The operator must therefore ensure that the heat exchanger is protected against excess pressure and temperature by means of suitable safety accessories in terms of quality and number and in accordance with the regulations.

5.2 List of important activities for the protection of interest

This part aims to explain the measures taken by FIVES CRYO to meet the requirements contract reflecting the requirements of the BNI Order [4] for important supplies for safety (IPS) in Nuclear Power Plants (NPP).

It applies to the manufacturing of both heat exchangers CHX and DUHS and it lists the important activities for the protection of interests (AIP) and associated Technical Controls (TC) that are mentioned in the follow-up document.

These heat exchangers are pressure equipment:

- Category is to be defined by the operator according to [1],
- ESPN level 3 according to [2],
- RCC-M 2 according to [4].

5.3 List of AIP and associated Technical Controls

The list of AIP and the associated Technical Controls are given in the following figures for the Design, for the Procurement / Subcontracting and for the Fabrication / Erection.

These AIP shall be validated with the Operator at the beginning.

		AIP	Defined requirements			Associated Technical Controls	
			Main characteristics and/or parameters of the RCC-M	Information necessary for carrying out operations	Recording	Type	Recording
Design	1	Studies / design	Allowable stresses Grades Thicknesses (dimensions) Corrosion allowance Drawings	Input Data : => Design temperatures (mini/maxi) / design pressures (mini/maxi) => Fluids => Seismic studies => Regulatory and radiation data from the Operator => Specification of equipment => Load cases to be taken into account for each situation	- Calculation note of pressure vessel - Calculation note of Supports - Drawings - Risks and Hazards Pressure and Radiation analysis	Carrying out the technical control of the studies : - Calculation notes - Drawings - Procurement specifications - Manufacturing and test procedures. Verification of study documents by individuals different from those that made them	Visa of the first page of each document Visa of checking sheets
	2	Studies / preparation	Provisional chronological list of procurement operations, of manufacturing operations, of control operations and of testing operations	Input data : => Procurement specification from Operator => Regulatory and radiation data from the Operator => Drawings BPE => Manufacturing and test procedures	- List of applicable documents - Follow up document - Welding book - Welding tracking forms - Brazing book	Verification by Quality Department Verification by Welding Department Verification of documents (welding book, brazing book, welding tracking forms…) by individuals different from those that made them	Visa of the first page of each document

Figure 6: List of AIP and the associated Technical Controls for the design

		AIP	Defined requirements			Associated Technical Controls	
			Main characteristics and/or parameters of the RCC-M	Information necessary for carrying out operations	Recording	Type	Recording
Procurement / Subcontracting	10	Procurement of material / Process of material fabrication	- Dimensions - Marking - Chemical analysis - Mechanical properties - Corrosion test - Defects in the material after transformation (forging, casting…)	- Drawings - Procurement material specifcations - Subcontracting order	- Report / certificate of material from provider - Folow up document	- Verification at reception of material by warehouse site of the material / parts - Verification at reception by quality personnel of the report / certificate of material - Quantitative and qualitative verification	Visa of follow up document
	20	Heat treatment (partial, simulated, final)	- Mechanical properties - Metallurgical structure	- Used furnace - Thermocouple (nb, mark, location) - Identification of the part - Position of the part in the furnace - Description of the thermal cycle - Sample of mechanical test	- Records of heat treatment - Records of mechanical tests - Temperatures diagrammes for furnace and material / parts (during heat treatment)	- Validation of the different steps of heat treatment - Verification of the recorded curves - Verification of the mechanical caracteristics	Visa of follow up documents of provider Eventual visa of other documents associated to verification
	30	Non destructive volumetric testing (RT, UT)	- Defects in the fabrication of the part - Weld / brazing defects	- Interpretation - Devices used - Mark of blocks control - Personnel - Adjustments - Parameters of radio examination - Radio element used - X ray cassette composition - Exposure time - Elements / chemicals for radiogram developing - Recording of control results	- Procedures - Reports of examinations - Radiogramms - Data acquisition	- Verification of information necessary for carrying out operations - Film sample replay (at least 3% of radiograms) - Verification of application of procedures (UT/RT) - Verification of used parameters (RT/UT) - Verification of examinations reports - Verification of the qualification of testing personnel - Verification of testing procedures RT/UT by certified Expert level 3 and by EDF - Validation NDT procedure by the manufacturer - Verification of the calibration of used devices	Visa of follow up documents of provider Eventual visa of other documents associated to verification
	40	Surface Treatment / Painting	- Application of RCC-M Part F - Qualification of procedure if necessary - Thickness, coat of paint - Paint system used	Specification of Client / Operator	- Report of thickness - Report of adhesion	- Verification of personnel qualifications for painting - Calibration of used devices - Verification of temperature and humidity - Verification of conditionning / packaging with products for use in nuclear power plant - Verification of painting according to procedures - Verification of reports (thickness and adhesion)	Visa of follow up documents of provider Eventual visa of other documents associated to verification
	50	Implementation of permanent assemblies (marking, welding, brazing, buttering, weld adding…)	- Surfaces, denseness - Technological defects - Dimensional visual - Chemical analysis - Mechanical properties - Appropriate metallurgical structure	- Welding / brazing procedure forms (welding energy…) - Chemical analysis for filler metal and base metal - Skills of welders / brazers / personnel - Non destructive tests to be realized	- Qualification of procedure welding / brazing reports (QMOS) - Records of welders / personnel qualification - Acceptance form of filler metal - Tracking forms for welding and brazing - Reports of examinations	- Verification of approval of welding book and brazing - Verification of welders qualifications - Verification of results for dimensionnal and visual inspection - Verification of filler metal lots - Verification of appropriate welding / brazing procedures forms - Verification of results for non destructive tests (surfacic and volumetric) - Realization of specimens coupons - Verification of eventual repairs	Visa of follow up documents of provider Eventual visa of other documents associated to verification

Figure 7: List of AIP and the associated Technical Controls for the procurement/subcontracting

		AIP	Defined requirements			Associated Technical Controls	
			Main characteristics and/or parameters of the RCC-M	Information necessary for carrying out operations	Recording	Type	Recording
Fabrication / Erection	100	Receipt / Identification of supplied and/or prefabricated material	Compliance with contractual requirements	- Procurement specification - Drawings - Inspection certificate / Fabrication report	Visa on the follow up document	Quantitative and qualitative verification	Visa on the follow up document
	200	Non destructive volumetric testing of welds	Weld defects	- Interpretation - Devices used - Mark of blocks control - Personnel - Adjustments - Parameters of radio examination - Radio element used - X ray cassette composition - Exposure time - Elements / chemicals for radiogram developing - Recording of control results	- Procedures - Reports of examinations - Radiogramms - Data acquisition	- Verification of information necessary for carrying out operations - Film sample replay (at least 3% of radiograms) - Verification of application of procedures (UT/RT) - Verification of used parameters (RT/UT) - Verification of examinations reports - Verification of the qualification of testing personnel - Verification of testing procedures RT/UT by certified Expert level 3 and by EDF	Visa of follow up documents Eventual visa of other documents associated to verification
	300	Machining (bevel, drilling ...)	Dimensions	Procedure of welding / brazing	- Report of dimensionnal / visual inspection - Report of dye penetrant test	- Verification of necessary informations - Verification of application of applicable procedures - Verification of records of dye penetrant test - Verification of the qualification of personnel in charge of examination	Visa of follow up documents Eventual visa of other documents associated to verification
	400	Forming (hot bending, cold bending, rolling...)	- Affected materials (dimensions, denseness, physical properties...) - Technological defects - Mechanicals properties - Residual stresses	- Qualification of forming - Heat treatment - Skills of the personnel	- Report of the Parameters - Tracking sheets	- Reports of forming procedures qualifications - Verification of forming parameters in workshop - Realization of specimens coupons	Visa of follow up documents Eventual visa of other documents associated to verification
	500	Implementation of permanent assemblies (marking, welding, brazing, buttering, weld adding...)	- Surfaces, denseness - Technological defects - Dimensional visual - Chemical analysis - Mechanical properties - Appropriate metallurgical structure	- Welding / brazing procedure forms (welding energy...) - Chemical analysis for filler metal and base metal - Skills of welders brazers / personnel - Non destructive tests to be realized	- Qualification of procedure welding / brazing reports (QMOS) - Records of welders / brazers / personnel qualification - Acceptance form of filler metal - Tracking forms for welding and brazing - Reports of examinations	- Verification of approval of welding book and brazing book - Verification of welders / brazers qualifications - Verification of results for dimensionnal and visual inspection - Verification of filler metal lots - Verification of appropriate welding / brazing procedures forms - Verification of results for non destructive tests (surfacic and volumetric) - Realization of specimens coupons - Verification of eventual repairs - Verification of welding / brazing parameters (first application by procedure and by personel and by site)	Visa of follow up document and tracking forms Eventual visa of other documents associated to verification
	600	Heat treatment (partial, simulated, final)	- Mechanical properties - Metallurgical structure	- Used furnace - Thermocouple (nb, mark, location) - Identification of the part - Position of the part in the furnace - Description of the thermal cycle - Sample of mechanical test	- Records of heat treatment - Records of mechanical tests - Temperatures diagrammes for furnace and parts (during heat treatment)	- Presence during the different steps of heat treatments - Verification of the recorded curves - Verification of the mechanical caracteristics	Visa of follow up documents Eventual visa of other documents associated to verification
	700	Cleaning	- Management of temporary elements - Risk management for Foreign Material Exclusion FME - Elimination of foreign material	- Installation - Removal	Follow up document	- Verification of the installation and removal procedures - Verification of the removal of temporary elements and FME (by internal and external visual inspection)	Visa of follow up documents Eventual visa of other documents associated to verification
	800	Assembly of static equipment, Erection of parts (flanges, piping, nozzles...)	- Completion of pressure equipment - Presence of all compliant assemblies - Documents for hydraulic test / burst test - Tightening of flanges - Identification / marking of equipment	- Follow up fabrication - Follow up assemblies - Form for hydraulic test and burst test - Drawings	- Follow up document - Procedure for hydraulic test and burst test - Records / reports	- Verification of tightening flanges - Verification of approval of hydraulic test procedures and burst test procedure - Realization of hydraulic test and burst test of equipment - Verification of non conformity forms	- Visa of follow up documents - Report for hydraulic test - Report of burst test - Eventual visa of other documents associated to verification

Figure 8: List of AIP and the associated Technical Controls for the fabrication/erection

5.4 Necessary dimensions to meet the essential safety requirements

An equipment is defined by several dimensions.

The purpose of this part is:

- to define the Necessary Dimensions to meet the Essential Safety Requirements DNRE
- to define the control of these DNRE,
- to define the traceability of these controls,

in compliance with the regulation [1] and [2] for the heat exchangers CHX and DUHS.

5.4.1 Definitions

Below are the definitions of the specific technical “words” used in this document:

A dimension is:

- a linear or angular dimensional characteristic,
- a geometric characteristic like a shape, a position or an orientation,
- a roughness.

For example, thickness e = 10mm.

A shape is an identical dimension obtained repeatedly on the same part.

The measurement uncertainty U is the parameter that characterizes the dispersion of possible values when measuring a dimension.

Measuring resolution is the smaller difference between two possible outcomes of a measure under the rule retained rounding.

Maximal permissible error (EMT) is the extreme value of the measurement error, relative to a known reference value, which is tolerated by the specifications or regulations for a given measurement, measuring instrument or measuring system.

The specification limits define the compliance field of the dimension. They could be bilateral or unilateral.

For example, thickness e = 10 -0.1/+0.2 mm or e = 10 mm max.

At the design stage, the manufacturer shall ensure that these specification limits are able to be fabricated, to be controlled and to be taken into account during the design.

The value of specification limits can be individual or from a general tolerance standard (example ISO 2768-1, NF EN ISO 13920). The specification limits can be a value or a geometrical specification (like for a location).

The tolerance is the difference between the upper and lower specification limits, called more commonly Tolerance Interval (IT).

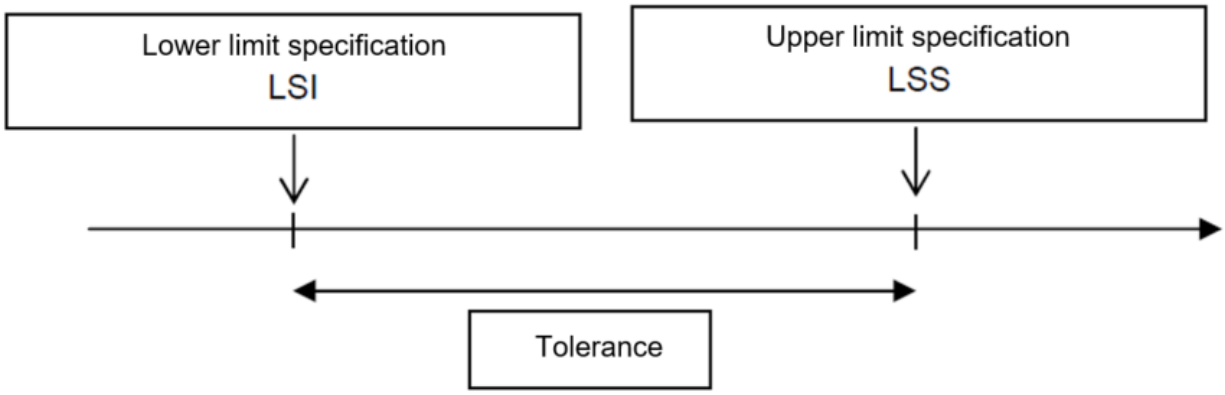

Figure 9: Tolerance interval

The DNRE are the regulatory dimensions in connection with:

- The pressure risks: these DNRE are the dimensions for which non-compliance with the specifications call into question the results of design related to applicable Essential Safety Requirements. These are the dimensions (input data and/or output data), considered important by the manufacturer for the pressure risks at the design stage, in the implementation of equations for design by formula or in calculation models for a design by analysis.
- The radiological risks: these are the dimensions that make it possible to satisfy radiation protection requirements. For example, this can be the slope of a flow, the roughness of a part…
- The overpressure protection: these are the dimensions related to compliance with the protection against overpressure. For example, the flow diameter (for an injection nozzle) or the stroke of a safety accessory…
- An identified dimension during the risks / hazards analysis.

DNRE are the main dimensions considered by the manufacturer of the equipment as important at the design stage. At the design stage, the manufacturer identifies the DNRE. The equipment drawing is the mean to identify these DNRE. This identification is based on a dialogue between people design and fabrication people to ensure that the identified DNRE are measurable at a fabrication stage, either directly or indirectly.

The identified DNRE are given in Appendix D of this document. This table gives:

- The reference and the designation of the DNRE,
- The reference of the drawing,
- The design value of the DNRE,
- The specification limit for this value,
- The stage of control/measurement,
- The measuring devices,
- The resolution of the measuring device.

The DNRE are generally:

- Thicknesses of parts for the pressure resistance (thickness of flanges, of heads, of cones, of pipes…),
- Inside or outside diameters of part for the pressure resistance,
- Geometry of threads,
- Radius of connection,
- Out-of-roundness…

5.4.2 Controls / Measurements of DNRE

5.4.2.1 Procedure of dimensional control / measurements

The control procedure is a document that defines the procedures for verifying the dimensional conformity of equipment to equipment drawings.

The procedure must contain the following paragraphs:

- Scope (equipment…),
- Applicable documents,
- Reference documents,
- Required qualifications for the personnel in charge of the control / measurement,
- Preparation of surfaces and ambient conditions (degreased, clean, temperature conditions…),
- Measurement method:
    - Geometry of the part, type of dimension, range of the dimension,
    - Measuring device with its measuring range and its resolution,
    - Units,
    - Accessibility, configuration of the part,
- Extent of control,
- Stage of control,
- Verification of measurement tools,
- Rules for the sampling,
- EMT or measurement uncertainty of measuring devices,
- Compliance criteria,
- Recording methods of control / measurement,
- Report content.

The measurement shall be realized in compliance with the control procedure. The results of measurement shall be recorded in compliance with the control procedure.

The measuring device is defined according to its own accuracy and the tolerant DNRE to be measured.

The measuring devices can be a caliper, a micrometer, a measure tape, a ruler, a protractor, a thickness tool by UT, a 3D tool…

Measurement instruments used to verify compliance must be verified periodically. The validity of this verification shall not exceed one year unless duly documented justifications. The measuring devices are verified according to the procedure [6] (in compliance with RCC-M).

A discrepancy, identified during the verification, must be documented as non-compliant accompanied by an impact analysis on the measures previously carried out. These verifications must be recorded. The verification shall be carried out in accordance with the following standards: NF E 05-059-1, NF E 11-091, NF E 11-095, NF E 11-090, NF E 11-096, NF E 11-097, NF E 11-099, NF EN ISO 463, NF E 11-053, NF E 11-056 or other equivalent appropriate technical standards (NF, EN, ISO…)

NF EN 14127 shall be applied for the application of ultrasonic thickness measurements.

For the measurement of roughness, sensor devices (contact or non-contact) meet the requirements of NF EN ISO 3274. The visual-touch pads are used to assess the surface condition of a part, in compliance with the document FDE05-051.

The manufacturer defines the units and the number of digits after the comma with which the result must be given. For example:

- for a value indicated by the measuring instrument of 1546.75 mm:
  - if the selected unit is mm and the number of digits after the decimal point is 1, then the result is written 1546.8 mm,
  - if the selected unit is cm and the number of digits after the decimal point zero, the result is written 155 cm,
- for a value indicated by the measuring instrument of 123.46 mm:
  - if the selected unit is mm and the number of digits after the decimal point is 1, then the result is written 123.5 mm,
  - if the selected unit is cm and the number of digits after the decimal point is zero, then the result is written 12 cm.

If a DNRE is not directly measurable, it can be measured indirectly by other performed measurements (difference of other dimensions, trigonometry...)

Measurements are carried out by persons authorized by the Manufacturer following a procedure defining the following requirements:

- the physical skills necessary for the realization of dimensional measurements,
- the theoretical and practical training required (understanding of drawings, of controls, of procedures, knowledge of measuring devices and their EMT/resolution…),
- the examination validating the level of knowledge required,
- the validity and conditions for maintaining the authorization,
- the conditions for renewal of the authorization,
- the methods for classification and archiving individual authorization files.

An authorization document specifying the used instruments and the associated supporting documents must be produced for each person carrying out the measurements.

The personnel in charge of controlling / measuring DNRE can be identified through skills matrix which states that the personnel are authorized to realize these control / measurements.

The measure is carried out by a person other than the person who participated in the manufacture of the dimension to be controlled.

Measurements will be made at room temperature (20 °C) according to NF EN ISO 1 Edition 2016. The conditions of these controls / measurements are explained in a written procedure.

5.4.2.2 Stage of Control / Measurement

The DNRE are surrounded on the drawings and are given in table Appendix D.

The table specify when the control / measurement is carried out.

The parts must be checked in the free-state. The dimensional control must be performed:

- at a stage where the dimension will not change significantly (for example after heat treatment),
- before a manufacturing operation that makes it impossible (as for example a coating),
- before hydraulic test,
- after hydraulic test, for dimensions obtained after hydraulic testing (for example the length of a nozzle).

For the material (pipe, elbow, fitting…), the compliance of DNRE can be given by the material procurement certificate type 3.1 or 3.2 according to NF EN10204 if the following points are met:

- The technical dimensional requirements to be met by the material are indicated in the material standard,
- The certificate 3.1 mentions dimensional conformity,
- The material producer has an appropriate quality assurance system, certified by a competent body established in the EU, with a specific assessment for this material.

The different DNRE concerns the thicknesses, the diameters, the lengths, the angulations, the roughness's, the slope, the profiles…

The methods of controls/ measurements of DNRE are detailed in a written procedure.

5.4.2.3 Rules concerning the sampling

When a dimension is repeatedly obtained on the same production line (or on the same part), it is possible to ensure dimensional conformity by sampling according to the standard NF ISO 2859-1 with at least a control level II with a simple sampling plan in normal control if the following requirements are met:

- the use of a reduced control is not allowed,
- sampling must be random,
- if the result of the sampling control is compliant, the entire lot is accepted, and each dimension is considered compliant,
- when a non-conformance is detected, a non-conformance sheet is opened and the extension of control is that provided by the standard NF ISO 2859-1 (with a transition to reinforced control of the non-compliant lot).

Depending on the size of the lot of parts (or the shapes of part) and the level control II, the code-letter (from NF ISO 2589-1) allows to determine the number of parts to be controlled in the lot in question according to Figure 10.

Number of parts in the lot	Control level II		Reinforced control		Control level III		Reinforced control	
	Code-letter	Number of parts to be controlled	Code - letter	Number of parts to be controlled	Code - letter	Number of parts to be controlled	Code-letter	Number of parts to be controlled
2 à 8	A	2	B	3	B	3	C	5
9 à 15	B	3	C	5	C	5	D	8
16 à 25	C	5	D	8	D	8	E	13
26 à 50	D	8	E	13	E	13	F	20
51 à 90	E	13	F	20	F	20	G	32
91 à 150	F	20	G	32	G	32	H	50
151 à 280	G	32	H	50	H	50	J	80
281 à 500	H	50	J	80	J	80	K	125
501 à 1 200	J	80	K	125	K	125	L	200
1 201 à 3 200	K	125	L	200	L	200	M	315
3 201 à 10 000	L	200	M	315	M	315	N	500
10 001 à 35 000	M	315	N	500	N	500	P	800
…								

Figure 10: Code-letter to determine the number of parts to be controlled in the lot in question

If a controlled part (or a controlled shape of the part) is non-compliant,

- this part is rejected,
- a non-conformance sheet is opened,
- a reinforced control is performed on the other parts of the lot according to the Figure 10 (with a 100 % control if this new control gives at least one non-conformance),
- the reinforced control is performed on the other lots, with 100 % control if the control gives at least non-conformance,
- the normal control is back again after 5 controlled lots without non-compliant parts.

5.4.2.4 Extent control

Extent control means the location and the number of measurements to be taken to control a dimension.

For axisymmetric parts:

- The thicknesses of cylindrical or conical parts, machined outside and inside, in the same machining operation, must be measured at both ends of each area of constant thickness and 4 points spaced 90°.
- The thicknesses of cylindrical or conical parts machined at the ends shall be measured at each end in 4 points spaced 90°.
- The machined internal or external diameters must be measured in two 90° orientations of the same section.
- The machined revolution profiles (shapes, slopes, radii, angles…) must be measured according to 2 axes offset by 90°.

For the roughness:

The standard NF EN ISO 4288 shall be applicated, except the §5.2. The requirements and recommendations of document FD E 02-051 §6 shall be applicated for a visual-touch control if the standard NF EN ISO 4288 is used.

5.4.2.5 Uncertainty measurement

The measurement uncertainty U must be given in the same unit as the measurement result.

The temperature difference between the part and the measuring instrument must be less than 10 °C when taking the measurement. Otherwise, the effect of temperature on the measurement must be taken into account.

For common measuring devices, the rule based on the use of EMT can be applied instead of the method of uncertainty estimation.

For the control of roughness, the visual-touch pads are to be used to check the roughness of the parts. They are not measuring instruments but measuring indicators. An estimation of measurement uncertainty is not necessary.

For other measuring device, the measurement uncertainty must be estimated according to the standard NF EN ISO 14253-2 or NF ISO/CEI GUIDE 98-3. In this case, the coverage factor is at least equal to 2.

5.4.2.6 Decision rules for the dimensional conformity

For common measuring devices, in order to determine the conformity of a dimension, the result of each measurement is compared to the specification limits of the dimension according to:

- Rule (a) if the specification is bilateral and the EMT of the instrument used is lower or equal to IT/10,

- Rule (b) in any other case.

RULE (a): If the result of the measurement is within the specified tolerances, then the dimension shall be declared compliant. If not, the dimension shall be declared non-compliant.

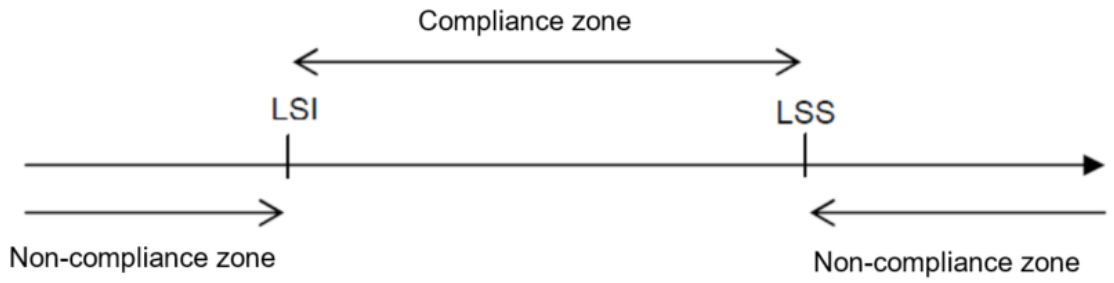

Figure 11: Conformity of a dimension

LSI: lower limit specification and LSS: upper limit specification.

RULE (b): the conformity area is reduced of EMT:

- if the result of the measurement is in the reduced compliance zone, then the controlled dimension is declared compliant,
- if a measurement result is in the area of non-compliance, the dimension is declared non-compliant.

The figures below show the cases of bilateral and unilateral limit specification:

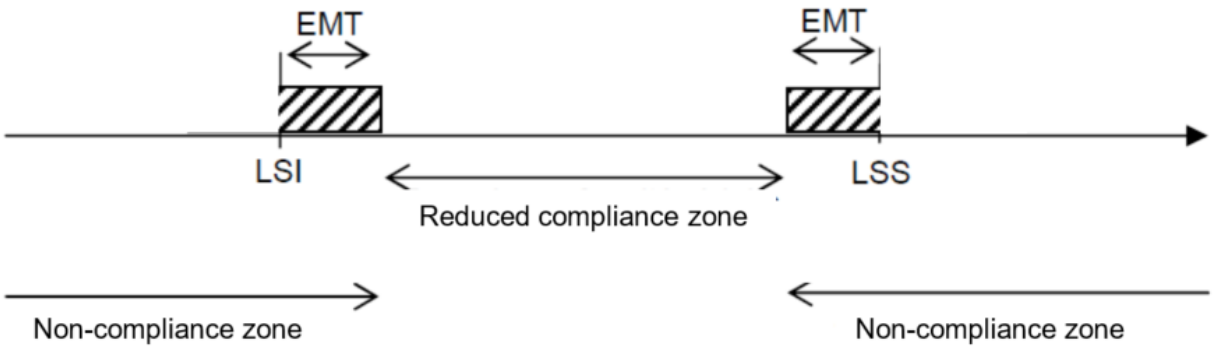

Figure 12: Bilateral limit specification for common measuring devices

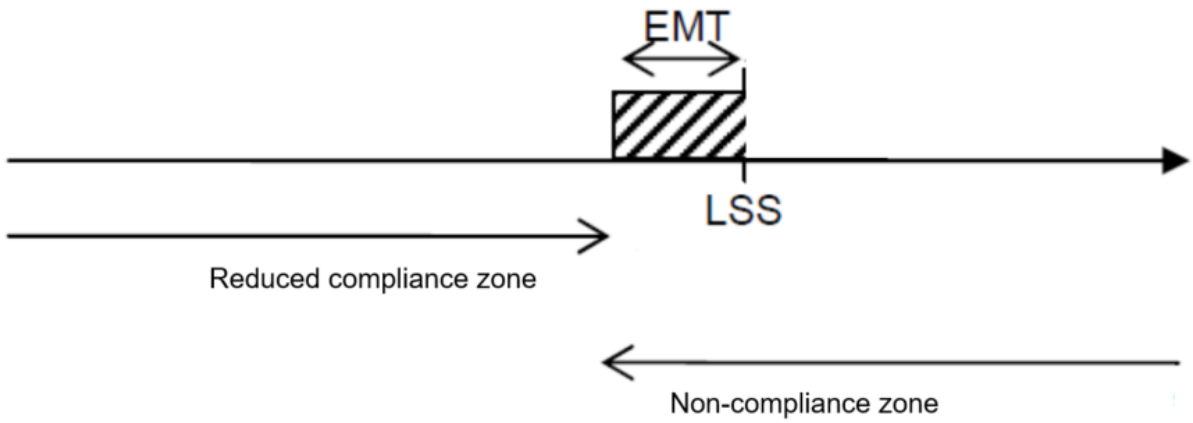

Figure 13: Unilateral limit specification for common measuring devices

For other cases, in order to determine the conformity of a dimension, the result of each measurement is compared to the specification limits of the dimension according to:

- Rule (a) if the specification is bilateral and the measurement uncertainty U of the instrument used is lower or equal to IT/10,
- Rule (b) in any other case.

RULE (a): If the result of the measurement is within the specified tolerances, then the dimension shall be declared compliant. If not, the dimension shall be declared non-compliant.

RULE (b): the conformity area is reduced of measurement uncertainty U:

- if the result of the measurement is in the compliance zone, then the controlled dimension is declared compliant,
- if a measurement result is in the doubt zone, then the dimension cannot be considered compliant. The Manufacturer may use another measuring instrument, if the procedure so provides, to remove any doubt as to the dimensional conformity of the measurement. Possible implementation of the second control and associated documentation must meet the requirements of the procedure. If the result of the second control is not in the compliance zone, the dimension is declared non-compliant.
- if a measurement result is in the area of non-compliance, the dimension is declared non-compliant.

The figures below show the cases of bilateral and unilateral limit specification:

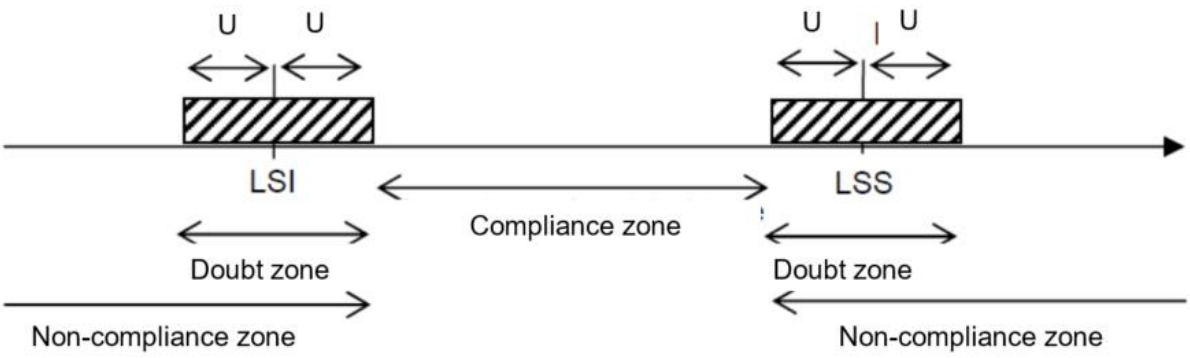

Figure 14: Bilateral limit specification for other cases

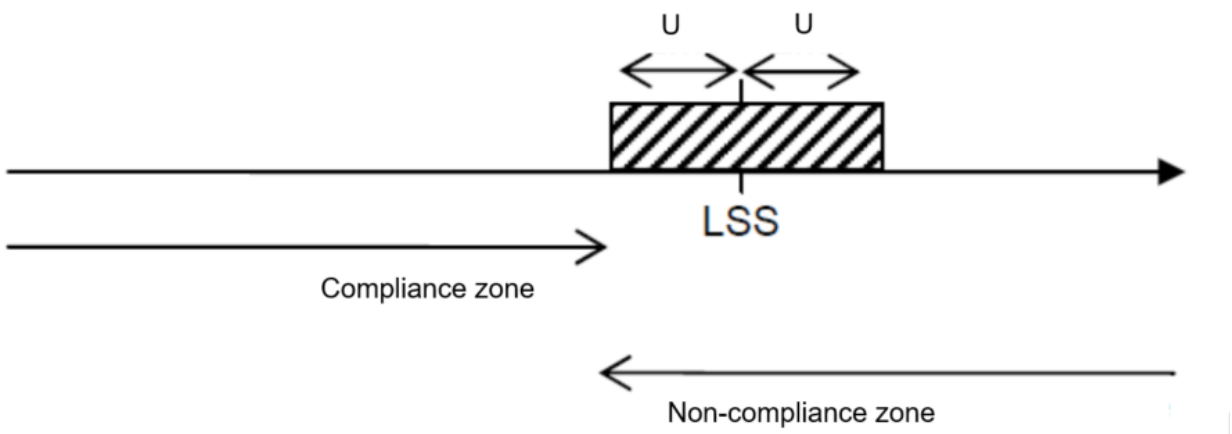

Figure 15: Unilateral limit specification for other cases

5.4.2.7 Examination certificate

The measured DNRE values shall be recorded. The measurement DNRE recording can be made in different kind of document (a drawing with measurements, a follow-up document, a control report…) which shall include the following elements:

- Designation of order, customer, manufacturer,
- Identification of the equipment and of the part to be controlled,
- The reference of applicable documents (procedure, drawings…),
- The stage of control,
- Identification of measuring device: type, marking, EMT, resolution, the end of calibration validity,
- The reference, the designation, the value, the tolerance of the DNRE,
- The recorded measured value, the results of the control (C or NC),
- The name and visa of the personnel in charge of the control, and the date of measurements.

The recording shall be checked by a different person in order to ensure completeness and consistency of the information provided. An example of certificate is proposed in Appendix E.

5.5 Material

5.5.1 Nuclear particular material appraisal

The nuclear particular material appraisal purpose is to provide the compliance of the material items used for the manufacturing of the heat exchangers with ESPN / PED.

In the tables below 2 detailed template examples applied to the bars for DUHS (316 alloy) and CHX (Inconel 690) are presented. The template can be used for all the material parts used in the manufacturing of the heat exchangers.

5.5.1.1 DUHS bars material appraisal

Table 12: DUHS ID template

Type	Vessels
Description of equipment or drawing n°	Heat exchangers DUHS
Nature and group of fluid	Circuit 1: Air (group 2) and circuit 2: Supercritical CO2 (group 2) Radioactivity: 0 MBq/t a priori Other fluid (cleaning rinse, hydraulic test): retained fluid compatible with the material (see risk analysis)
ESPN Level / Risk pressure Category / Module of assessment	ESPN N3 / Category IV / Module H1 (or B+F or B+D or G)
Destination and Intended Use	Nuclear Power plant in European countries for the Project sCO2-4-NPP (new emergency cooling system)
Construction Code and Level	RCC-M Edition 2018 Level RCC-M2

Minimal allowable pressure / maximal allowable pressure	Circuit 1: Mini. 0 / Maxi.+10 and Circuit 2: Mini. 0 / Maxi.+230	(bar)
Minimal allowable temperature / maximal allowable temperature	Circuit 1: Mini. -30 / Maxi.+300 and Circuit 2: Mini. -30 / Maxi.+300	(°C)
Creep range, theoretical operating duration of life	Not Applicable	
At temperature of	Not Applicable	
Fatigue, theoretical cycles number	Not applicable	
Allowance corrosion	0	(mm)

Table 13: DUHS Bars ID template

Type	Bars items according to RCC-M M3307 and EN10272
Grade of material	X2CrNiMo17-12-2 1.4404 according to EN 10272 and Z2CND17.12 according to RCC-M M3307
Procurement specification	Document n° (to be defined)
Destination and Intended Use	Bars items for Heat exchangers DUHS See drawing n° (to be defined)

Table 14: Compliance with essential safety requirements of PED, with radiological protection requirements and with complementary requirements identified in risks/hazards analysis for DUHS

REQUIREMENTS		Specifications and/or tests methods	Details of conformity
Decree 2015-799 DESP2014/68/UE	Arrêté du 30/12/2015		
Appendix I - §2.2.3a) **Pressure contain-ment and other loadings aspects**	Appendix 2 §2	The criteria for the acceptability of stresses are those in Appendix Z of RCC-M and with characteristics of tables of standard EN 10272**.**	Calculation note Certificate 3.1 according to EN10204

Appendix I - §4.1a) §2.2.3b) **Mechanical properties Rm - Ret**	Appendix 2 §2	The input data used are those from EN 10272 (harmonized standard regarding with essential safety requirements defined in clause 4 Appendix 1 of DESP) and those from RCC-M M3307: Sy, Re,Rp 0.2 %,20 °C ≥ 200 MPa Rp 1.0 %,20 °C ≥ 235 MPa 700 ≥ Rm, Su, 20 °C ≥ 500 MPa Sy, Rp 0.2 %,t ≥ 113 MPa à 350 °C Rp1.0 %,t ≥ 139 MPa à 350 °C Su, Rm t ≥ 382 MPa à 350 °C Tests performed according to RCC-M MC1000 and EN10272.	Certificate 3.1 according to EN10204
Appendix I - §4.1a) et §7.5 **Fracture toughness / Elongation after rupture A≥14%, KV≥27J**	Appendix 2 §2 **Design to minimize risk of loss of integrity**	The input data used are those from EN 10272 [12] (harmonized standard regarding with essential safety requirements defined in clause 4 Appendix 1 of DESP) and those from RCC-M M3307 [5]: Elongation A% > 45 % KV > 100 J at 20 °C (Long.) KV ≥ 60 J at -196 °C (Tr.) KV > 27 J at TS_{min} covered by standard EN 10272 [12] which guarantees KV ≥ 60 J at -196 °C (Tr.). Tests performed according to RCC-M MC1000 and EN10272 [12]. Visual examination 100 % of surfaces and edges according to MC7100, M3307 and EN10272 [12].	Certificate 3.1 according to EN10204
Appendix I - §2.2.3.b) **Creep resistance**	Appendix 2 §2	As TS_{max} is 300 °C, the temperature creep range of austenitic steels is not reached. This phenomenon will therefore not affect the material.	Risks / Hazards analysis
Appendix I - §2.2.3.b) **Fatigue resistance**	Appendix 2 §2	Equipment and material not submitted to fatigue and mechanical / thermal cycles.	Risks / Hazards analysis Calculation note

Appendix I - §2.6 **Corrosion resistance**	Appendix 2 §2	X2CrNiMo17-12-2 and Z2CND17.12 bars parts are supplied according to the harmonised standard EN 10272 [12] and RCC-M M3307 [5]. The corrosion risks envisaged are as follows: The fluids in contact with the walls (air + CO2 super critical) are compatible with the grade used. **- Inter-granular corrosion induced by chromium carbides:** The stainless austenitic steel used (X2CrNiMo17-12-2/ Z2CND17.12) has a low carbon content (C 0.03 %) which makes it insensitive to this type of corrosion. Nevertheless, parts supplied according to EN 10272 and RCC-M M3307 must be subjected to inter-granular corrosion tests according to EN 10272 and according to RCC-M MC1000. **- Pitting corrosion**: The limitation of the sulphur content of the austenitic stainless steels used (S 0.015 %), makes it possible to limit the formation of sulphur inclusions which are preferred sites of initiation of pitting corrosion. The addition of molybdenum in the composition also increases the pricking strength of the alloy. Materials are stripped and passivated to reduce this risk. The presence of water in the liquid phase will not cause corrosion provided that there are no harmful contaminants in the process fluid and ambient atmosphere (mainly halogens and sulphur elements). That's why, the chemistry of the fluids and ambient atmosphere must be well controlled to guarantee levels of harmful elements (halogens: chlore, iode… and sulphur…) **- Crevice corrosion**: The design of the equipment is designed to minimize crevice areas. However, the use of flanges can create this type of corrosion if harmful elements are present. The same recommendations as for the risk of pitting corrosion are applicable in this case. **- Generalized corrosion**: Austenitic steels with a minimum chromium content of 15 % are known to have good resistance to generalized corrosion. In the working fluids and atmosphere (saline air), the type of alloy used is not subject to generalized corrosion. With Ts max 300 °C, no risk of sensitization of the alloy (formation of chromium carbides or inter-metallic phases type sigma…)	The measurement of the chemical component on product is included in certificate 3.1 in accordance with NF EN 10204.

Appendix I §2.7 **Wear resistance, erosion resistance and abrasion resistance**	Appendix 2 §2	X2CrNiMo17-12-2 and Z2CND17.12 bars parts are supplied according to the harmonized standard EN 10272, which has a presumption of compliance with the PED, and according to RCC-M M3307. Since the velocity of fluids in the equipment is low, erosion is not considered. The % Cr content strengthens the resistance to erosion. Moreover, the fluid does not contain solid particles thanks to a filter system.	Risks / Hazards analysis document Certificate 3.1 according to EN10204
Appendix I §3.1.2 Appendix I §4.1.e) **Weldability / Brazability**	Appendix 2 §3	Properties of grade compliant with RCC-M M3307 [05] and with harmonized standard EN 10272 which has a presumption of compliance with the PED. No heterogeneous assembly on the equipment without welding / brazing procedure specifications. The % of C, S and P and Rm are compliant with RCC-M M3307 and with harmonized standard EN 10272 (presumption of compliance with the PED).	Risks / Hazards analysis [9] Certificate 3.1 according to EN10204
Appendix I §4.1b) **Chemical compositi-on**	Appendix 2 §3	X2CrNiMo17-12-2 and Z2CND17.12 bars parts are supplied according to the harmonized standard EN 10272, which has a presumption of compliance with the PED, and according to RCC-M M3307. Other requirements: – % Co on cast and on product: not applicable – % C, P and S on cast and on product compliant with EN 10272 [12] and RCC-M M3307 [5] – % B on cast and on product < 0.0018% – % Cr on cast and on product ≥16.5% – Exemption of antimony and silver (usual acceptable residual content to be communicated by the supplier after measurement)	Certificate 3.1 according to EN10204
Appendix I §4.1c) **Sensitivity to aging**	Appendix 2 §2 et §3	X2CrNiMo17-12-2 and Z2CND17.12 bars parts are supplied according to the harmonized standard EN 10272, which has a presumption of compliance with the PED, and according to RCC-M M3307. The allowable maximal temperature (TS_{max}) is 300 °C; the thermal aging phenomenon is non-existent at this temperature. Since parts are not subjected to a direct neutron flux, no ageing due to irradiation is to be feared.	Risks / Hazards analysis document
Appendix I §4.1d)	Appendix 2 §3	X2CrNiMo17-12-2 and Z2CND17.12 bars parts are supplied according to the harmonized standard EN 10272, which has	Risks / Hazards

Suitable for the intended processing methods		a presumption of compliance with the PED, and according to RCC-M M3307. The rate of deformation is <10 %. So heat treatment is not required. The brazing operation causes an alteration of the metallurgical condition of the material which corresponds to a solution heat treatment performed under vacuum at a temperature of ~1175 °C. The mechanical properties of the treated material shall satisfy the values referenced by RCC-M M3307 and EN 10272 in the solution annealed conditions.	analysis document
Appendix I §3.1.1 **Preparation of compo-nents**	Appendix 2 §3	Surfaces to be assembled shall be prepared in accordance with RCC-M S3200.	/

Appendix I §3.1.4 **Heat treatment**	Appendix 2 §3	X2CrNiMo17-12-2 and Z2CND17.12 bars parts are supplied according to the harmonized standard EN 10272, which has a presumption of compliance with the PED, and according to RCC-M M3307. The heat treatment (solution annealed temper) is compliant with harmonized standard EN 10272 and with RCC-M M3307.	Certificate 3.1 according to EN10204
Appendix I §4.3 **Material certificate**	Appendix 2 §3	Conformity with EN 10272 and with RCC-M M3307. Supply according to M111.3 is not allowed. Certificate 3.1 on product according to EN10204	Certificate 3.1 according to EN10204
Appendix I §7.2 §2.2.3.b) **Joint coefficient**	Appendix 2 §3 **Suitable non-destructive testing**	Joint efficiency coefficient z=1 in the design. Non destructive examination according to RCC-M.	Calculation note document
-	Appendix 2 §1 **Respect of requirements for highly unlikely situation**	External pressure: 1.083 bar. External temperature: (-58,1 to +48) °C. Humidity: 100 %. No other highly unlikely situation required by the Operator / client	

-	Clause 9 and Appendix 4 **Respect of radiological protection requirements**	The equipment is classified RP-C. Other requirements: – % Co on cast and on product: not applicable, – % B on cast and on product < 0.018% – Ra ≤ 6.3 µm for machined material – Ra ≤ 12.5 µm for raw material

5.5.1.2 CHX bars material appraisal

Table 15: CHX ID template

Type	Vessels	
Description of equipment or drawing n°	Heat exchangers CHX	
Nature and group of fluid	Circuit 1: water vapor (Steam) (group 2) and circuit 2: Supercritical CO2 (group 2) Radioactivity: 0 MBq/t a priori Other fluid (cleaning rinse, hydraulic test): retained fluid compatible with the material (see risk analysis)	
ESPN Level / Risk pressure Category / Module of assessment	ESPN N3 / Category IV / Module H1 (or B+F or B+D or G)	
Destination and Intended Use	Nuclear Power plant in European countries for the Project sCO2-4-NPP (new emergency cooling system)	
Construction Code and Level	RCC-M Edition 2018 [5] Level RCC-M2	
Minimal allowable pressure / maximal allowable pressure	Circuit 1: Mini. 0 / Maxi.+90 and Circuit 2: Mini. 0 / Maxi.+230	(bar)
Minimal allowable temperature / maximal allowable temperature	Circuit 1: Mini. -30 / Maxi.+300 and Circuit 2: Mini. -30 / Maxi.+300	(°C)
Creep range, theoretical operating duration of life	Not applicable	
At temperature of	Not applicable	
Fatigue, theoretical cycles number	Not applicable	
Allowance corrosion	0	(mm)

Table 16: CHX bars ID template

Type	Forged bars items according to RCC-M M4102 and SB166 ASME
Grade of material	N06690 according to SB166 ASME and NC30Fe according to RCC-M M4102
Procurement specification	Document n° (to be defined)
Destination and Intended Use	Plates items for Heat exchangers CHX See drawing n° (to be defined)

Table 17: Compliance with essential safety requirements of PED, with radiological protection requirements and with complementary requirements identified in risks/hazards analysis for CHX

REQUIREMENTS		Specifications and/or tests methods	Details of conformity
Decree 2015-799 DESP2014/68/UE	Arrêté du 30/12/2015		
Appendix I - §2.2.3a) **Pressure contain-ment and other loadings aspects**	Appendix 2 §2	The criteria for the acceptability of stresses are those in Appendix Z of RCC-M and with characteristics of tables of standards RCC-M and SB166 ASME (recognized standard for pressure equipment)**.**	Calculation note document Certificate 3.1 according to EN10204
Appendix I - §4.1a) §2.2.3b) **Mechanical properties Rm - Ret**	Appendix 2 §2	The input data used are those from SB166 ASME and those from RCC-M M4102: 400 MPa ≥ Sy, Re, Rp 0.2%, 20 °C ≥ 240 MPa Rm, Su, 20 °C ≥ 586 MPa Sy, Rp 0.2%,t ≥ 180 MPa à 350 °C Su, Rm t ≥ 551 MPa à 350 °C Tests performed according to RCC-M M4102 and MC1000 and ASME SB166.	Certificate 3.1 according to EN10204
Appendix I - §4.1a) et §7.5 **Fracture toughness / Elongation after rupture A≥14%, KV≥27J**	Appendix 2 §2 **Design to minimize risk of loss of integrity**	The input data used are those from ASME SB166 and those from RCC-M M4102: Elongation A% > 35 % Nickel alloy not subjected to brittle rupture. No risks and no tests until -198 °C according to UNF65. Impact test only on RCC-M 1 according to M4102 (KV > 100 J at 20 °C) Visual examination 100 % of surfaces and edges according to MC7100, M4102. US examination according to MC4102 and MC2300.	Certificate 3.1 according to EN10204

Appendix I - §2.2.3.b) **Creep resistance**	Appendix 2 §2	As TS_{max} is 300 °C, the temperature creep range of steels is not reached. This phenomenon will therefore not affect the material.	Risks / Hazards analysis document
Appendix I - §2.2.3.b) **Fatigue resistance**	Appendix 2 §2	Equipment and material not submitted to fatigue and mechanical / thermal cycles.	Risks / Hazards analysis document Calculation note document

Appendix I - §2.6 **Corrosion resistance**	Appendix 2 §2	NC30Fe plates parts are supplied according to SB166 ASME standard and RCC-M M4102. The corrosion risks envisaged are as follows: The fluids in contact with the walls (diphasic steam + CO2 super critical) are compatible with the grade used. **- Inter-granular corrosion induced by chromium carbides:** The nickel alloy used (with a low carbon content (C 0.04 %)) is insensitive to this type of corrosion. Nevertheless, parts supplied must be subjected to micrographic examination (grain size) according to RCC-M MC1000. **- Pitting corrosion**: The limitation of the sulphur content of the alloy used (S 0.01 %), makes it possible to limit the formation of sulphur inclusions which are preferred sites of initiation of pitting corrosion. Materials are stripped to reduce this risk. The presence of water in the liquid phase will not cause corrosion provided that there are no harmful contaminants in the process fluid and ambient atmosphere (mainly halogens and sulphur elements). That's why, the chemistry of the fluids and ambient atmosphere must be well controlled to guarantee levels of harmful elements (halogens: chlore, iode… and sulphur…) **- Crevice corrosion**: The design of the equipment is designed to minimize crevice areas. However, the use of flanges can create this type of corrosion if harmful elements are present. The same recommendations as for the risk of pitting corrosion are applicable in this case. **- Generalized corrosion**: Alloy Nickel (with a minimum chromium content of 28 %) are known to have good resistance to generalized corrosion. With the working fluids, the type of alloy used is not subject to generalized corrosion.	The measure-ment of the chemical component on product is included in certificate 3.1 in accordance with NF EN 10204.

Appendix I §2.7 **Wear resistance, erosion resistance and abrasion resistance**	Appendix 2 §2	N06690 and NC30Fe plates parts are supplied according to SB166 ASME [12] and according to RCC-M M4102 [05]. Since the velocity of fluids in the equipment is low, erosion is not considered. The % Cr content strengthens the resistance to erosion. Moreover, the fluid does not contain solid particles.	Risks / Hazards analysis Certificate 3.1 according to EN10204
Appendix I §3.1.2 Appendix I §4.1.e) **Weldability / Brazability**	Appendix 2 §3	Properties of grade compliant with RCC-M M4102 and with SB166 ASME. No heterogeneous assembly on the equipment without welding / brazing procedure specifications. The % of C, S and P and Rm are compliant with RCC-M M4102 and with ASME (recognized standard for pressure equipment).	Risks / Hazards analysis Certificate 3.1 according to EN10204
Appendix I §4.1b) **Chemical compo-sition**	Appendix 2 §3	N06690 and NC30Fe plates parts are supplied according to the SB166 ASME [12] (recognized standard for pressure equipment) and according to RCC-M M4102 [5]. Other requirements: – % Co on cast and on product: not applicable – % C, P and S on cast and on product compliant with SB166 ASME [12] and RCC-M M4102 [5] – % B on cast and on product < 0.0018 % – % Cr on cast and on product ≥16.5 % – Exemption of antimony and silver (usual acceptable residual content to be communicated by the supplier after measurement)	Certificate 3.1 according to EN10204
Appendix I §4.1c) **Sensitivity to aging**	Appendix 2 §2 et §3	N06690 and NC30Fe plates parts are supplied according to the SB166 ASME (recognized standard for pressure equipment) and according to RCC-M M4102. The allowable maximal temperature (TS_{max}) is 300 °C; the thermal aging phenomenon is non-existent at this temperature. Since parts are not subjected to a direct neutron flux, no ageing due to irradiation is to be feared.	Risks / Hazards analysis
Appendix I §4.1d) **Suitable for the intended**	Appendix 2 §3	N06690 and NC30Fe plates parts are supplied according to the SB166 ASME (recognized standard for pressure equipment) and according to RCC-M M4102. The brazing operation causes an alteration of the metallurgical condition of the material which corresponds to	Risks / Hazards analysis

processing methods		a solution heat treatment performed under vacuum at a temperature of ~1175 °C. The mechanical properties of the treated material shall satisfy the values referenced by RCC-M M4102 and SB166 ASME in the solution annealed conditions.	
Appendix I §3.1.1 **Preparation of compo-nents**	Appendix 2 §3	Surfaces to be assembled shall be prepared in accordance with RCC-M S3200.	/

Appendix I §3.1.4 **Heat treatment**	Appendix 2 §3	N06690 and NC30Fe plates parts are supplied according to the SB166 ASME (recognized standard for pressure equipment) and according to RCC-M M4102 The heat treatment (solution annealed temper) is compliant with the SB166 ASME (recognized standard for pressure equipment) and according to RCC-M M4102.	Certificate 3.1 according to EN10204
Appendix I §4.3 **Material certificate**	Appendix 2 §3	Conformity with SB166 ASME and with RCC-M M4102. Supply according to M111.3 is not allowed. Certificate 3.1 on product according to EN10204	Certificate 3.1 according to EN10204
Appendix I §7.2 §2.2.3.b) **Joint coefficient**	Appendix 2 §3 **Suitable non-destructive testing**	Joint efficiency coefficient z=1 in the design. Non-destructive examination according to RCC-M.	Calculation note document
-	Appendix 2 §1 **Respect of requirements for highly unlikely situation**	No highly unlikely situation required by the Operator / client	
-	Clause 9 and Appendix 4 **Respect of radiological protection requirements**	The equipment is classified RP-C. Other requirements: – % Co on cast and on product: not applicable, – % B on cast and on product < 0.018 % – Ra ≤ 6.3 µm for machined material	

		– Ra ≤ 12.5 µm for raw material

5.6 Inspection and Quality Control

5.6.1 Note for inspections

The purpose of this part is to provide a template to report and justify of the inspectability of the heat exchanger in compliance with the PED [1] and the nuclear regulation [2], to ensure a permanent safety of the equipment (after the first commissioning by the operator) and to ensure the radiation protection of the stakeholders performing the inspection of equipment.

The manufacturer must ensure the feasibility of inspections (visual, dimensional, NDT, etc.) to meet the needs identified in the risks analysis and reported in the instruction for use manual. This feasibility includes an analysis of the adequacy between the proposed means of examination and:

- the geometry,
- the accessibility,
- the grade,
- the type of degradations,
- the conditions of radiation protection.

5.6.1.1 Hypotheses / Inspection conditions

The assumptions considered for this analysis are as follows:

- the insulation is removable,
- the equipment is decontaminated before inspection,
- the surfaces are clean.

The inspection necessary for the in-service safety (internal / external) shall be realized equipment without fluid, without pressure and at room temperature.

Since the fluid is radioactive, surfaces that may be touched during the inspection should be cleaned beforehand to limit contamination.

The in-service safety inspection is carried out under the responsibility of the operator by qualified and competent personnel who shall be able to identify the potential defects and degradations and to assess their severity.

These actions are carried out under the responsibility of the operator who is in charge of shutting down the installations.

5.6.1.2 Accessibility and environment

The equipment is in the local (to be defined) building (to be defined), elevation (to be defined) in the Nuclear Power Plant (to be defined) (see drawing n° (to be defined)).

The equipment is in yellow area (from 25 µSv/h to 1.99 mSv/h) in term of radiation. The dose rate taken into account for this study is 1.99 mSv/h.

The environment of the equipment is as shown in Figure 16.

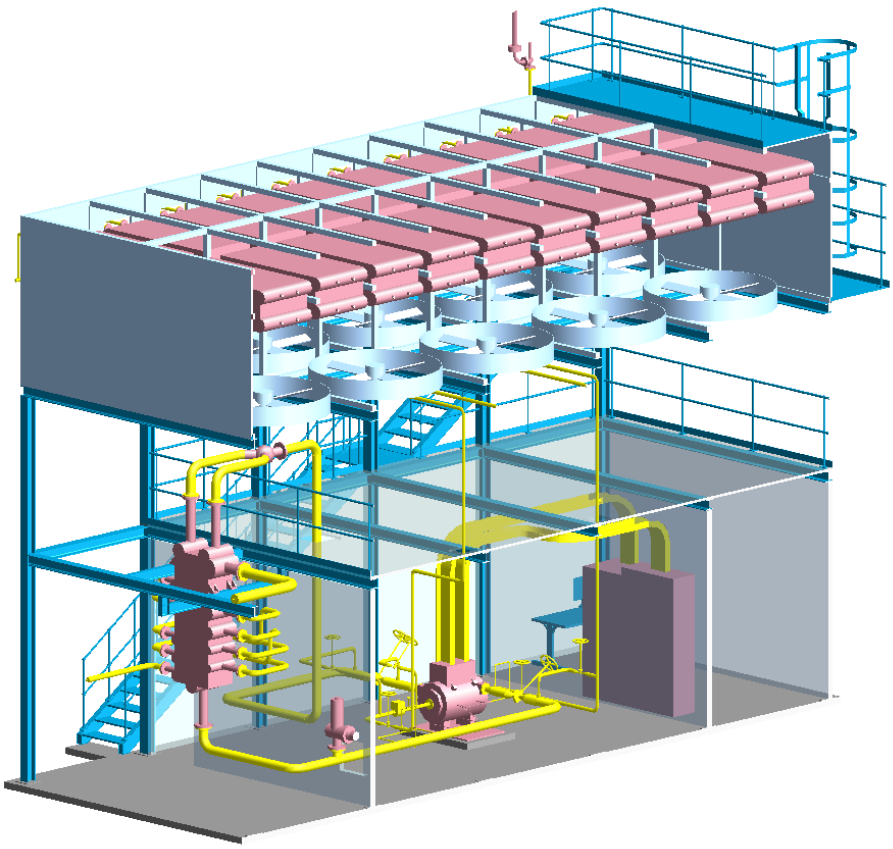

Figure 16: Environment of the equipment [27]

It is the responsibility of the operator to make available the means (scaffolding…) necessary for the inspection of the equipment in accordance with the regulations.

5.6.1.3 External inspectability

The external surface includes:

- the external surfaces of the elements subjecting to pressure and attached parts on equipment,
- the external surfaces of the inlet and outlet nozzles and flanges,
- the external surfaces of welds.

The insulation of the equipment shall be removed.

The external surfaces of the equipment (shell, heads, pipes, welds…) shall be inspected by installing specific means of access. The welds are marked on the drawing n° (to be defined).

The Control is a direct visual control. In case of doubt, a dye penetrant test can be carried out.

Table 18: Estimated duration of areas inspection

Area to be inspected / controlled	*Defects to be detected (residual risks of hazards analysis)*	*Means of inspection*	*Estimated duration*
Entire equipment	Control as complete as possible to identify:	Direct visual control	25 min

except welds	– possible traces of corrosion (pitting, presence of corrosion products cracking, heat-insulating corrosion…) – mechanical failure (deformations, shocks, cracks, fatigue…)	Eye + lighting	
Circular weld C1	Identical	Direct visual control Eye + lighting	10 min
Circular weld C2	Identical	Direct visual control Eye + lighting	10 min
Weld L1	Identical	This weld is accessible and can be seen directly on half of its perimeter. Since the weld is subjected to the same operating conditions throughout its circumference, it is considered that the visible half is representative of the non-visible half.	5 min
Flange nozzle oulet fluid 1	Check absence of sagging and the condition of the flange facing when removing the flanges	Direct visual control Eye + lighting	5 min
Flange nozzle inlet fluid 1	Check absence of sagging and the condition of the flange facing when removing the flanges	Direct visual control Eye + lighting	5 min
Flange nozzle oulet fluid 2	Check absence of sagging and the condition of the flange facing when removing the flanges	Direct visual control Eye + lighting	5 min
Flange nozzle inlet fluid 2	Check absence of sagging and the condition of the flange facing when removing the flanges	Direct visual control Eye + lighting	5 min
Critical part detected	Loss of thickness if necessary	Measurement of residual thickness by US (by external side)	

Total estimated duration for the external inspection of equipment: 70 min.

5.6.1.4 Internal inspectability

The internal surface includes:

- the internal surfaces of the elements subjecting to pressure,
- the internal surfaces of the inlet and outlet nozzles and flanges,
- the internal surfaces of welds,
- the surfaces of internal elements in the equipment (fins…)

5.6.1.5 Consideration of radiologic risks

According to the operator, the equipment is in a yellow controlled zone: dose rate 1.99 mSv/h.

The equipment is designed and manufactured to meet radiation protection requirements of [26].

The quantity and the list of welds and parts requiring inspection is limited.

No hot spots were identified by the operator and manufacturer at the design stage (RP-C classification).

Classification of the area may change. It is imperative to check the operator's radiation protection map at the time of inspection.

It is recommended to make a dosimetric survey of the area in order to establish the most accurate dose rate.

The internal inspection can be carried out with an endoscope. This one can be accessorized with a pole to limit the exposure of the hands.

Table 19: Estimated radiological exposure for one stakeholder

Type of works	Estimated duration of intervention (hour)	Exposure of the intervention (mSv)
External inspection of equipment	1	1.99
Openings of flanges	2	3.98
Internal inspection	1	1.99
Closures of flanges	2	3.98
Time of total works	6	11.94

5.6.2 Visual and dimensional welding control

This procedure defines the methods for carrying out dimensional and visual control on welded assemblies. It applies to both CHX and DUHS exchangers.

The visual examination covers:

- Parts intended for welding (base metal) before and/or after welding,
- Assembly or coating or butting welds,
- Support welds.

5.6.2.1 Examination conditions

The areas to be examined must be free of any product that may interfere with examination and interpretation. The welds must be in their final state.

For maximum control efficiency, concerning the illumination, it is necessary to ensure that especially:

a. To direct the light beam correctly on the area to be examined

b. To avoid glare

c. To optimize the color temperature of the light source

d. To use an illumination level compatible with the reflectivity of the surface.

The minimum illumination level of the surface to be examined shall not be less than 500 Lux. It is verified by a measurement carried out on the surface under examination using a calibrated and valid luxmeter.

The examination is achieved by direct and indirect visual examination.

Direct visual examination is performed without interruption of the optical path between the operator's eye and the controlled area. This control may be carried out without or with visual aid, such as a mirror, lens, endoscope, or optical fibres.

In general, direct visual inspection can be carried out when access to the area allows the eye to be placed at a distance of no more than 600 mm from the surface to be inspected and at an angle greater than or equal to 30° from this surface. The examination is carried out only by eye (without another device).

Mirrors can be used to improve the angle of vision and aids such as magnifying lenses (max. x6), endoscopes (rigid) and fiber optics can be used to facilitate the examination.

Indirect visual examination is a visual inspection achieved with interruption of the optical path between the operator's eye and the controlled area. Indirect visual control includes the use of a photograph or video camera, automatic systems and robots.

In cases where direct visual inspection cannot be performed, indirect visual inspection may be used instead.

Indirect visual inspection uses visual aid devices such as endoscopes, optical fibers coupled to cameras or any other appropriate instrument.

Instruments used for indirect visual examinations must have a resolution power at least equal to that of direct visual examination.

Personnel achieving these examinations must provide evidence of satisfactory visual acuity verified annually:

For direct visual examination:

These personnel are selected:

- either among the operators certified in non-destructive testing,

- or among personnel familiar with the development or manufacturing methods of the elements under examination like welders, pipe fitter.

For indirect visual examination:

Controllers performing indirect visual examinations are qualified and certified in accordance with MC 8000. This covers examination documents and realization of examination.

Agents performing indirect visual examinations are certified level 2 in Visual Inspection Method (VT) according to EN ISO 9712.

5.6.2.2 Examination stage

The visual examination is carried out at the stages indicated in the Quality Plan or Follow-up document:

- Before approach / positioning between the parts to be welded, on surfaces or bevels,
- After approach / positioning between the parts to be welded,
- During welding (external surface and internal surface self-checking whenever possible),
- After welding execution and cleanliness of the welds (self-checking),

- Before and/or after a welding or forming or brazing operation,
- At the end of manufacture or assembly after marking and cleanliness without prejudice to the controls carried out beforehand,
- After repair following Non-Destructive Testing.

Visual examinations are carried out based on documents (procedures, plans ...) containing at least the following information:

- Types of assemblies or elements examined
- Forms
- Dimensions
- Examination material / devices
- Examination methods (areas subject to examination, surface condition, ...)
- Acceptance criteria

5.6.2.3 Examination criteria for pipe and vessel

The cleanliness should be verified. Are checked:

- that the surfaces are free of dust, grease, oil and ferritic pollution in the case of austenitic stainless steels.
- the absence of foreign bodies before the installation of special devices and means (D.M.P.)

The quality of the surface finishes is estimated using visual-touch samples:

- Ra is ≤ 12.5 µm for raw surfaces
- Ra is ≤ 6.3 µm for machined or ground surfaces

The absence of apparent defects should be inspected. The internal surfaces of the nozzles are checked where accessible, as well as the internal surfaces of drilled and tapped holes. We check that there are no nicks, scratches, scrapes, or projections that may affect the use of the part or the operation of the system to which it belongs.

Before and after forming operations, the parts must have surfaces free of streaks, folds, cracks, fissures, or any other defect detrimental to use.

When an indication is detected, a non-conformity form is opened. It is possible to proceed to a grooming completed by a surface examination. The possibility of elimination is checked by measuring the available excess thickness in relation to the nominal thickness or in relation to the calculation thickness. The measuring method is adapted to the required accuracy. The actions to be taken will be dealt with in the non-conformity sheet.

Examination of edges before welding and incorporated tack welds should be checked.

Before contact between the parts to be welded, a verification of the conformity (dimensions, surface condition, absence of visible defects) of the bevel and connection slopes (tapered reduction) to the execution documents (drawings, welding books).

After contact between the parts to be welded, checking at least one weld at four points:

- of the edge spacing: according to the welding procedure sheet for point 0 corresponding to the start of the weld, opposite to point 0 an additional gap of 1 to 2 mm is necessary to compensate for shrinkage.
- of the height difference (compliance with the requirements in page 70)

- cleanliness: absence of water, grease, oil, oxides and other products that may interfere with welding.
- the appearance of the edges to be welded after removal by grinding of the landing rounds (during the first pass).

The appearance of incorporated tack welds should be checked to highlight Absence of shrinkage, cracks, porosity, grooves and irregularities that could hinder the welding process. This examination may be completed by penetrant testing if there is a suspicion of indication.

In order to achieve visual and dimensional weld inspection, there are criteria to be applied to the equipment base material and the welded joints.

For the base material, the tolerances on the thicknesses of the elements to be welded are given in the technical equipment specification:

- The tolerances to be observed for the material are those of chapter F40000 of the RCC-M Code.
- The tolerances given on the drawing prevail over those of the RCC-M when they are more restrictive.

It is reminded that the manufacturing tolerances comply, at a minimum, with the following requirements:

- The tolerance of the outside diameter of the nozzles is the higher of the two following values: ±1 % or 0.5mm, with a maximum of 5mm,
- The tolerance of the nozzle thickness at the end to be welded is fixed at: -12.5 % and +20 %. The low thickness tolerance (-12.5 %) is also applicable to the whole body of the nozzle.
- For elbows, the high tolerance (+20 %) is applicable to the whole body.

For the welded joints:

- Type 1 Joints: Butt and angular joints obtained by full penetration welding with an angle of less than 30°.
- Type 2 joints: Angular joints obtained by full-penetration welding with an angle greater than 30°.

The dimensions and condition of the face and back surfaces, where the back is accessible, shall meet the characteristics stipulated on the applicable drawings and, for the molten part of the weld, the following criteria, where not otherwise stipulated on the drawings.

→ Level 2 Butt Welds – Type 1 joints

- Maximum allowable over-thickness. For butt welds, they must not exceed the values shown below:

Table 20: Maximum allowable over-thickness

<table>
<tr><th rowspan="3">Maximum allowable over-thickness (mm)</th><th rowspan="2">With back weld</th><th>Primary weld (n° 502, Appendix S II)</th><th>Back Weld (n° 504, Appendix S II)</th></tr>
<tr><td rowspan="2">1/10 of the weld bead width + 1 mm with a maximum of 5 mm (1)</td><td>1/10 of the weld bead width + 1 mm</td></tr>
<tr><th>Without back weld</th><td>$\frac{e}{20} + 0.5$ with a maximum of 1.5 mm (2)</td></tr>
</table>

(1) For non-grinded weld, that are located on piping, allowable maximal over-thickness must not exceed following values:
- 1.5 mm for e ≤ 5 mm
- 2.0 mm for 5 < e ≤ 10 mm
- 2.5 mm for e > 10 mm

with e = nominal thickness of the piping.

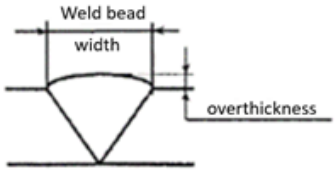

(2) For butt joint on pipes, allowable over-thickness of the back weld is:
- 1.5 mm for e ≤ 5 mm
- 2.5 mm for 5 < e ≤ 10 mm
- 3.0 mm for e > 10 mm

- HEIGHT DIFFERENCE:

According to the following:

→ For welded joints on both sides or on only one side but accessible from the reverse side

a- The mean fibers of the parts to be assembled are aligned with the tolerances of manufacturing

b- Alignment tolerances of the internal surfaces between parts of similar thickness are given by Table 21.

Table 21: Alignment tolerances of the internal surfaces between parts of similar thickness

Thicknesses of assembled parts (mm)	Maximal drop
e < 12	e/4
e ≥ 2	e/10 + 2 with a maximum of 8 mm

c- Alignment tolerances of parts with different thicknesses

The mean fibers of parts with different thicknesses could be shifted in a way to allow the maximal drop of internal surfaces to be lower than the values given in Table 21, considering for e the thickness of the thinner part.

In case of longitudinal welds, the thinner part should be included between the surfaces of the thicker part as shown in Figure 17.

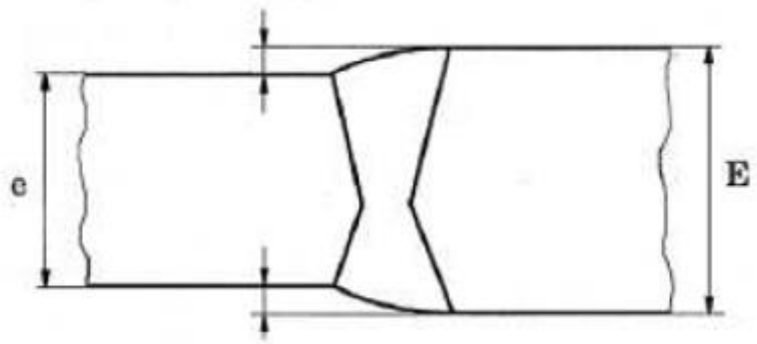

Figure 17: Illustration of the inclusion of the thinner part to be welded between the surfaces of the thicker part

→ For welded joints on one side only but inaccessible on the reverse side

For internal surfaces, their maximal drop should not exceed the value of e/20 +1 with a maximum of 3 mm for level 1 and 2 materials, and 3.75 mm for level 3 materials.

For external surfaces, the values in Table 21 and Figure 17 are applicable. For parts with different thicknesses, we attribute to e parameter the thickness of the thinner part.

- OVERFLOW:

No overflow of the over-thickness of the weld on a part edge is allowed.

Note: An overflow is a local over thickness from the deposited metal overlaying the unfused base metal.

- LACK OF THICKNESS:

A hollow penetration ≤ 0.5 mm is acceptable for welds made in ceiling position. In all other cases, they are unacceptable.

- LACK OF PENETRATION:

No lack of penetration is acceptable.

- UNDERCUT:

No undercut of the type described below is allowed (see nature of defect in ISO 6520-1 and Table 22).

Table 22: Types of forbidden undercuts

Type 5011 on external surfaces	**Continuous undercut: undercut of significant length without interruption**
	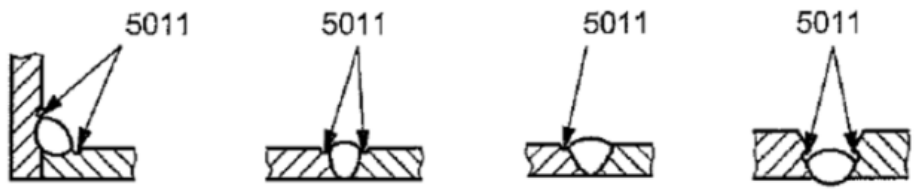
Type 5013 on inner surfaces on both sides of the weld seam	**Shrinkage grooves: undercuts visible on each side of the root run**
	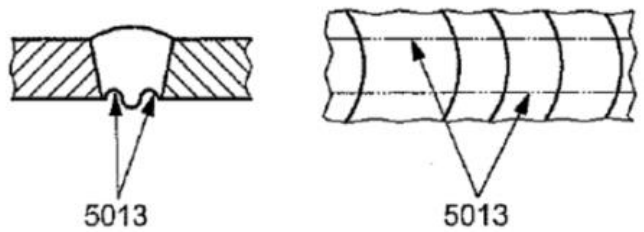

If such defects exist, they will be removed by grinding and, if necessary, filled by welding.

In the case of irregularities in the connection, such as a low depression with a non-sharp profile, bordering the weld, for which a visual examination alone would not allow a decision to be made on the presence or absence of undercuts, as defined above, the following procedure will be used:

- In the case of welds to be totally repaired / patched by grinding, the irregularities will have to be eliminated during these operations. Repair / patching is the operation of grinding the weld seam carried out with the aim of completely eliminating the furrows and waves of welding, while preserving the curved shape of the outer weld seam.
- In the case of welds that can remain in the same state, only irregularities that can give any indications which are not in accordance with the criteria during the Penetrant Testing examination will have to be eliminated after the repair / patching.

- OTHER DEFECTS

Lack of thickness, collapses, crater shrinkage, bites, rocks, and plane defect, blows and inclusions on the surface are not allowed.

→ Fillet welds

The above criteria apply except for those concerning height difference and over-thickness (additional thickness).

The groove height g must be greater than the minimum value defined by the calculation and drawings, if applicable (see Table 23).

Table 23: Tolerances for Nozzle welds, groove dimensions for fillet welds and/or nozzles and small sized nozzles

Nozzle welds – Tolerances according to RCC-M
Rules applicable to tubing connections using type 2 joint
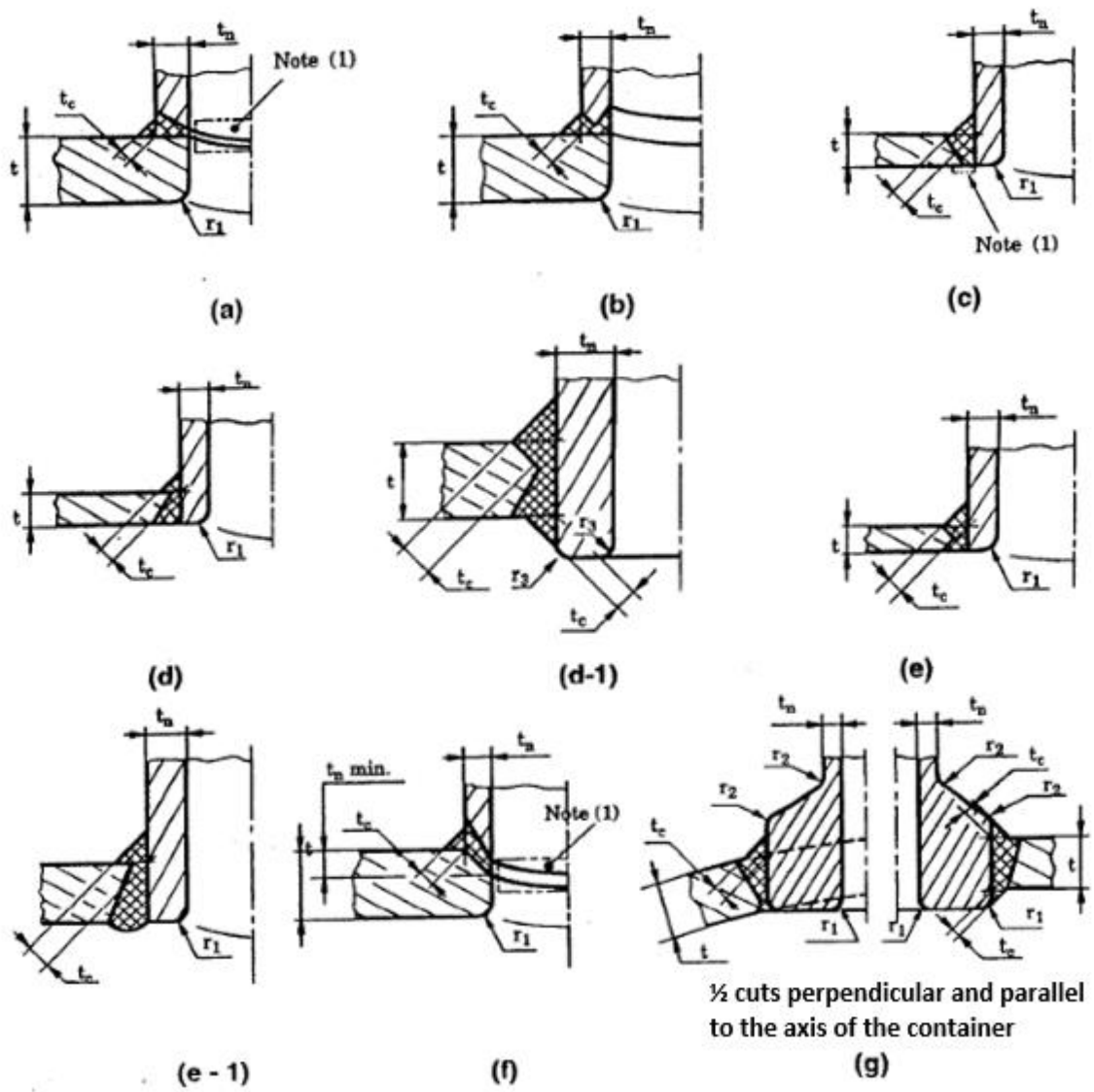
Note: (1): the supports possibly used must be eliminated. (2): the notations are as follows:

t = nominal thickness of the part containing the opening
tn = nominal thickness of the tubing
tc = min (0.7 tn; 6 mm)
r_1 = min (t/4; 20 mm)
r_2 = min (tn/4; 10 mm)
(a 45° bevel with a dimension greater than or equal to 8 mm can be substituted for this last requirement for r2)

Fillet welds and/or nozzles – Groove dimensions

Non-penetrating nozzle without chamfer

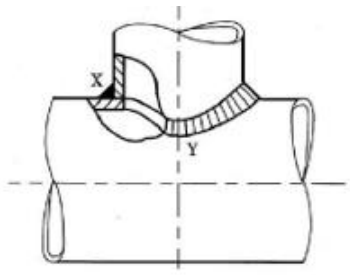

FIGURE 2.3. a Different diameters

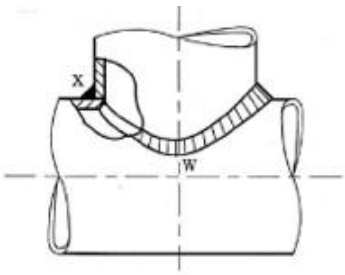

FIGURE 2.3. b Equal diameters

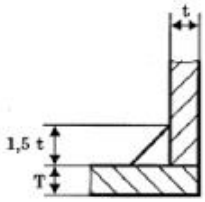

Cut X

Cut Y

* Provision of 3 mm when pipe hole is done by oxycutting (see note S III/2)

Cut W

Penetrant nozzle

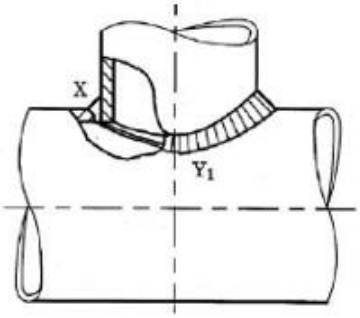

s = 1,5 mm ± 0,8 mm.
g = 2,5 mm ± 0,8 mm.

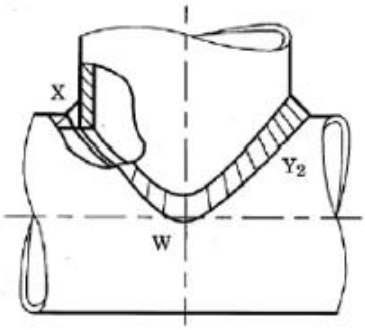

FIGURE 2.5 a Different diameters

FIGURE 2.5 b Equal diameters

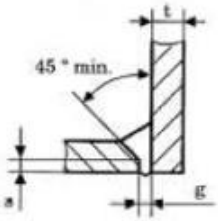

Cut X

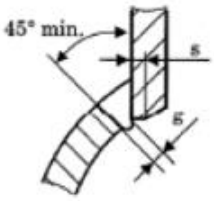

Cut Y_1

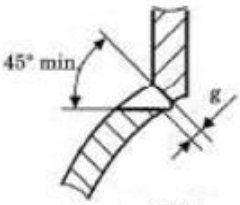

Cut Y_2

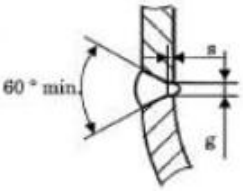

Cut W

Small sized nozzles

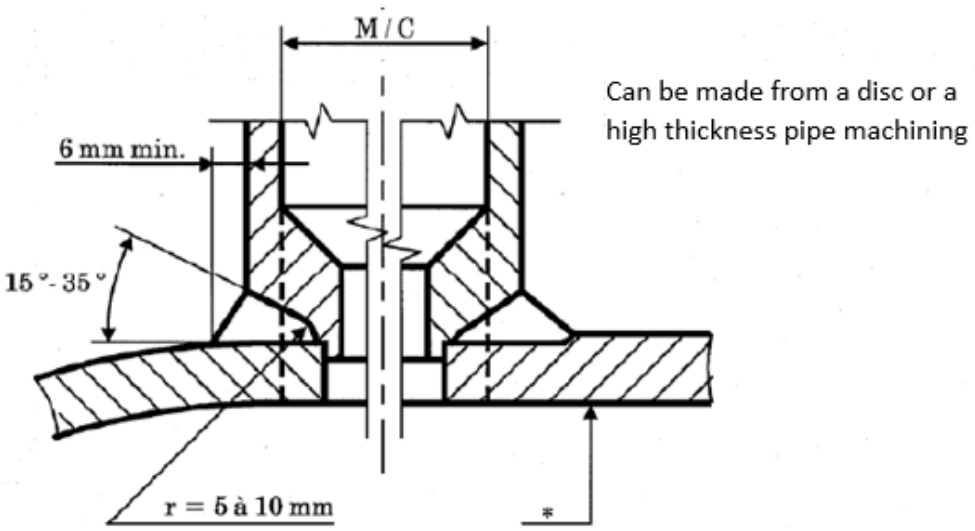

FIGURE 2.9 a

* All preparation can be done via machining

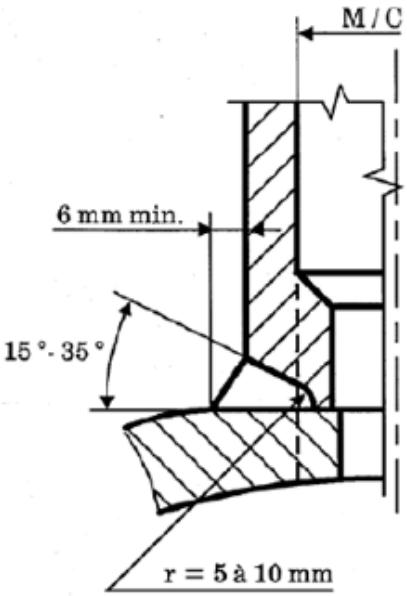

FIGURE 2.9 b

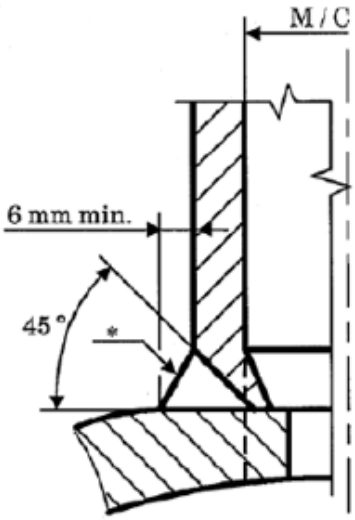

FIGURE 2.9 c

Nota :Boring following dotted line M/C

→ Nozzle welds

For nozzles, all welds should be examined, prior to the execution of the other non-destructive examinations prescribed by this document.

The dimensions and condition of front and back surfaces, when the back surface is accessible, shall meet the characteristics stipulated on the applicable drawings and, for the molten part of the weld, the following criteria, where not otherwise stipulated on the drawings.

The inner surfaces of drilled or bored holes are particularly controlled. It is ensured that there are no nicks, scratches, scrapes, or projections that could be detrimental to the use of the part or the proper functioning of the system to which it belongs.

- MAXIMUM ALLOWABLE OVER THICKNESSES

They must comply with the requirements of the Table 23.

- OVERFLOW

No overflow of the over-thickness of the weld on a part edge is allowed.

Note: An overflow is a local over thickness from the deposited metal overlaying the unfused base metal

- LACK OF PENETRATION

No lack of penetration is allowed.

- UNDERCUT

No undercuts are allowed. If such defects exist, they will be eliminated by grinding and filled, if necessary, by welding.

In the case of connection irregularities, such as a low depression with a non-sharp profile, bordering the welding, for which a visual examination alone would not allow a decision to be made on the presence or absence of undercuts, as defined above, the following approach will be used:

  - In the case of welds to be totally repaired / patched by grinding, irregularities will have to be eliminated during these operations,
  - in the case of welds that can remain in the same state, only irregularities that may give rise to out of criterion indications during the Penetrant Testing or the subsequent MT will have to be eliminated after the repair / patching.
- OTHER DEFECTS

Collapses, indentations, bites, rocks and plane defects, blows and inclusions on the surface are not allowed.

After the examination, a marking control should be applied. It must be checked that the marking has been carried out in accordance with:

- the marking procedure, and according to the thickness of the part, we check that the identifications carried are perfectly legible and have been:
  - either stamped with ball or rounded edge numbers
  - or made with a vibrating pencil
- the instructions defining the identifications and indications to be carried on the constituent elements:
  - identification of the constituent element(s)
  - weld marking / location
  - radio marking / location
  - punch of the welder(s)

These markings are chosen selectively according to the nature of the material according to the impositions for each type of material.

5.6.2.4 Examination criteria for supports

The following checks are carried out at the end.

The cleanliness should be checked through the absence of ferritic contamination is checked for austenitic stainless-steel supports or parts of supports.

The dimensional tolerances of the mechanical welding supports are as follows:

- The tolerance between two assembled pieces of supports with different thickness must be less than the smaller of the two values: 25 % of the thickness of the thinner piece or 5 mm.
- There must not be any breakage ≥ at 5° between two pieces planned aligned.

For dimensional examination of support welds, unless explicitly stated otherwise on the drawings or in the absence of information, the following requirements must be complied with:

- The welds are continuous,
- The total periphery of the connection is welded with a buckle at the beginning of the seam weld.

→ For butt welds:

- If the CRT 53.C.026.03 (EDF document) is an applicable requirement for the fabrication (document mentioned in the order):
  - welds in the final state are cleaned of slag remnants or adhering projections, but may remain welding raw materials,
    - The following requirements have to be respected: the height h should stay within the following limits 1 mm < h < L/10 + 2 mm with L the width of the weld bead.

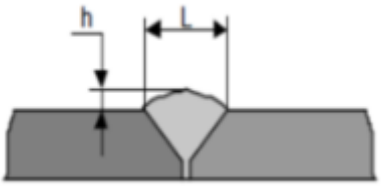

- For application of RCC-M:

The maximum over-thickness of butt welds must be less than 50 % of the thickness of the assembled parts with a maximum of 5 mm.

→ For fillet welds:

- If the CRT 53.C.026.03 (EDF document) is an applicable requirement for the fabrication (document mentioned in the order):
  - With no specific details, the minimum groove value is: g = 3 mm,
  - The following requirements have to be respected: dimensions of the weld bead

  $0.7 < h_1/h_2 < 1.4$ and the height of the groove (a) should respect the drawings measurements specifications with a precision +0/+3

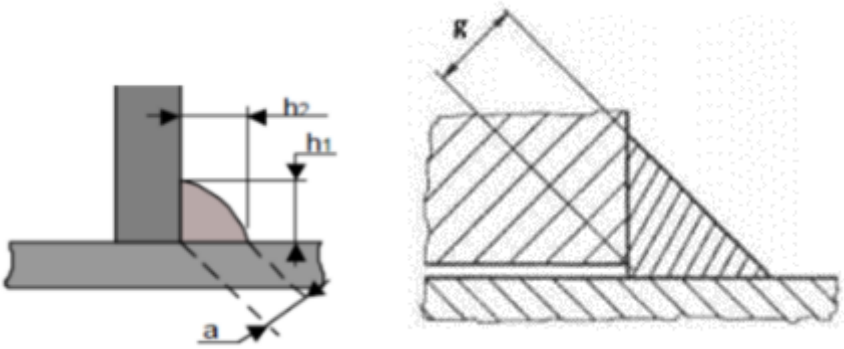

- For application of RCC-M:

- The height of groove of the fillet welds (or partial penetration) shall not be less than the greater of two values: 3 mm and 0.7 x t, where t is the thickness of the thinnest pieces assembled.
- Fillet welds must be concave. The limits below are acceptable.

Table 24: Acceptable limits for concave fillet welds

Groove size (mm)	Minimum	Maximum
a ≤ 6	0	+ 2 mm
6 < a ≤ 10	0	+ 3 mm
10 < a ≤ 20	0	+ 4 mm
a > 20	0	+ 5 mm

No under-thickness of the groove value is allowed. The measurement made on the concave part of the weld seam must be at least equal to the required value.

For visual examination of support fillet welds, if the CRT 53.C.026.03 (EDF document) is an applicable requirement for the fabrication (document mentioned in the order), for level 2 RCC-M, only indications with a maximum dimension > 2 mm shall be taken into account, the following defects are unacceptable:

- Cracks,
- Blow holes or inclusions leading to the surface,
- Rocking,
- Lack of penetration longer than 10 mm; two defects shall be considered as forming only one if the distance between them is less than six times the length of the shortest,
- Penetration lack with a cumulative length exceeding 20 mm per weld or fraction weld of 300 mm,
- Gutters with a depth greater than 0.5 mm,
- Gutters longer than 20 mm; two defects shall be considered as forming only one if the distance between them is less than six times the length of the shortest.

If the CRT 53.C.026.03 is not an applicable requirement for the fabrication (not mentioned in the order), for level 2 RCC-M, no cracks or other linear indication is acceptable (an indication is called linear if its length is greater than or equal to 3 times its width), only indications with a maximum dimension > 2 mm shall be taken into account, and for welds concerning support level S2, gutters are acceptable with dimensions of

- Depth < 1 mm,
- Length < 40 mm with total cumulated length < 20 % of weld seam length

In case of doubt about the characterization of an undercut, a penetrant test may be performed, and the defect accepted or refused according to the applicable criteria in penetrant test inspection.

The control marking must be carried out in accordance with the marking procedure; we check that the identifications carried are perfectly legible and have been either typed with ball or rounded edge numbers or made with a vibrating pencil according to the thickness of the part. The instructions defining the markers are to be indicated on each support.

5.6.2.5 Responsibilities and documentation

The workshop leaders or team leaders are responsible for the execution of the visual controls during manufacturing. The final visual inspection must be carried out by a controller or a person with the required competence. The person in charge of the control certifies its execution:

- by filling in the boxes of the quality plan or follow-up document, provided for this
- by writing a visual examination report

In the event of a non-conforming result, a report shall be drawn up systematically and shall specify the position of the non-conforming areas.

5.6.2.6 Examination report

When a review report is drawn up, it shall include at least the following information:

- The identification of the manufacturer, of the order and of the equipment,
- The identification of the piece, of the weld or of the area subjected to examination (with grade),
- The designation of the visual examination specification used,
- The stage of examination,
- The method and device used,
- The extent of examination,
- The result of interpretation,
- The name of controller,
- The date, the place of examination and the controller visa.

5.6.3 Visual and dimensional equipment control

In this part, the visual and dimensional equipment control procedure is detailed. It defines the methods for carrying out dimensional control and direct or indirect visual control of the manufactured equipment at any stage of manufacturing in compliance with the follow-up document. It applies to both CHX and DUHS exchangers.

5.6.3.1 Responsibilities and documentation

The workshop leaders, team leaders or controllers (persons different from those who performed the operation) are responsible for performing visual and dimensional controls during manufacturing.

The person in charge of the control certifies its execution:

- Either by filling in the boxes in the quality plan provided for this purpose or
- by ticking the box "Dimensional / visual control" on the Control Sheet.

The reports are established according to the following bilingual template in Figure 18 and Figure 19.

Cryogenics | Energy

fives

CONTRÔLE VISUEL

VISUAL EXAMINATION TEST RECORD

En accord avec la procédure section 2 n°4.2.03 Rév. 6

In accordance with the procedure section 2 n°4.2.03 Rev. 6

Client *Customer*	**Type** *Type*
Ingéniérie *Engineering*	**Désignation** *Designation*
Utilisateur *User*	**N° de série** *Serial N°*
Projet *Project*	**Plan d'appareil à pression** *Pressure Vessel Drawing*
Commande *Order*	**Plan d'ensemble** *Assembly drawing*

Matière / *Material*	**Voir plan d'appareil à pression /** *See pressure vessel drawing*	**Code Construction / Norme**	ASME VIII. DIV.1 ASME V Art. 9
Epaisseur / *Thickness*	**Voir plan d'appareil à pression /** *See pressure vessel drawing*	*Construction Code / Norm*	

PRODUITS ET TECHNIQUES : *PRODUCTS AND TECHNIQUES :*	
Moyen d'éclairage : LED Lenser V2	**Lumière blanche ≥ 1076 lux**
Lighting equipment :LED Lenser V2	*White light ≥ 1076 lx*
Contrôle visuel réalisé suivant procédure 4-2-03 **Critère d'acceptation suivant procédure 4-2-03** *Visual examination performed according to procedure 4-2-03* *Critéria of acceptance according to procedure 4-2-03*	

CONTRÔLE ET RÉSULTATS : *EXAMINATION AND RESULTS :*	
Etendue du contrôle *Extended checking*	***Résultat*** *Result*
100% De toutes les soudures (têtes et accessoires sur échangeur brasé).	**SATISFAISANT**
100% all welds (headers and accessories on to brazed core).	*SATISFACTORY*

CLIENT et/ou TIERCE PARTIE *Client and/or Third Part*	**Inspecteur autorisé ou Organisme Notifié** *Authorized Inspector or Notified Body*	**CONTRÔLE QUALITE FIVES CRYO** *Quality Control Fives Cryo*

Fives Cryo
25 Bis, rue du fort
88190 GOLBEY France

PAGE 1 / 1

Figure 18: Bilingual template for visual examination test report

Cryogenics | Energy

fives

PROCES VERBAL DE CONTRÔLE DIMENSIONNEL

DIMENSION CHECK REPORT

Client *Customer*	**Type** *Type*
Ingéniérie *Engineering*	**Désignation** *Designation*
Utilisateur *User*	**N° de série** *Serial N°*
Projet *Project*	**Plan d'appareil à pression** *Pressure Vessel Drawing*
Commande *Order*	**Plan d'ensemble** *Assembly drawing*

Voir plan tel que construit ci-joint - Toutes les cotes mesurées sont identifiées par ☐

See attached "as built drawing" - All measured positions are shown by ☐

Toutes les cotes relevées sont en conformité avec le plan et tolérances requises *All dimensions checked are in accordance with the drawing and requested tolerances*	
Les cotes ci-dessous ne sont pas en conformité avec le plan ou sont hors tolérances *Dimensions below are not in accordance with the drawing or out of tolerances*	

Circuit *Stream*	Entrée *Inlet*	Sortie *Outlet*	Cote nominale *Requested dimension*	Cote mesurée *Measured dimension*	Décision *Decision*

A: Acceptée en l'état par Fives Cryo, à prendre en compte lors de l'assemblage sur site
Accepted as it is by Fives Cryo, to be taken into account during assembly on site

CR : Dérogation acceptée par client (voir document joint)
Concession request approved by customer (see document attached)

CLIENT et/ou TIERCE PARTIE *Client and/or Third Part*	Inspecteur autorisé ou Organisme Notifié *Authorized inspector or Notified Body*	CONTRÔLE QUALITE FIVES CRYO *Quality Control Fives Cryo*

Fives Cryo
25 Bis, rue du fort
88190 GOLBEY France

Figure 19: Bilingual template for dimension check report

5.6.3.2 Operational staff

Personnel must provide evidence of satisfactory visual acuity verified annually.

The personnel responsible for carrying out dimensional examination and direct visual examinations are selected:

- either among the operators certified in non-destructive testing or

- among personnel familiar with the development or manufacturing methods of the elements under examination like welders, pipe fitter.

Controllers performing indirect visual examinations are qualified and certified in accordance with MC 8000. This covers examination documents and realization of examination.

Agents performing indirect visual examinations are certified level 2 in Visual Inspection Method (VT) according to EN ISO 9712.

For the use and the controls carried out with the "3D Tacheometer" equipment, a specific training of the operators is necessary.

A specific internal implementation procedure is used.

3D scanning can also be used to model the elements to be controlled, and processing can be carried out by Design Office staff using appropriate software. If this control is subcontracted, the supplier may use its own dimensional control reports. Each report will specify the calibration certificate number of the used device and the measurement uncertainty. It will be verified by the Fives Cryo quality department.

5.6.3.3 Conditions for carrying out dimensional control

The dimensional control is carried out on one or several elements before or after assembly according to of the follow-up document.

Preparation:

- burr removal
- cleaned elements: absence of all traces of oil, grease, lubricant, and various deposits, inside and outside
- stabilized elements, accessibility compatible with the controls to be carried out

Lighting:

- natural or artificial and must allow easy reading of measuring or comparison instruments

Temperature:

- absence of variation sensitive to the hand between the different parts of the piece to be controlled
- the elements to be checked must be at the ambient temperature of the workshop or construction site

Handling:

- made with clean slings for austenitic stainless-steel parts

5.6.3.4 Dimensional control of the elements composing the exchanger

Controllers use measurement indicators (meters, decameters) or devices (calipers, palms...) distributed by Fives Cryo and periodically verified according to the rules of the internal procedure of Fives Cryo.

The tolerances on the thicknesses of the elements to be welded are given in the technical equipment specification:

- The tolerances to be observed for the material are those of chapter F40000 of the RCC-M Code.
- The tolerances given on the drawing prevail over those of the RCC-M when they are more restrictive.

It is reminded that the manufacturing tolerances comply, at a minimum, with the following requirements:

- The tolerance of the outside diameter of the nozzles is the higher of the two following values: ±1 % or 0.5 mm, with a maximum of 5 mm,
- The tolerance of the nozzle thickness at the end to be welded is fixed at: -12.5 % and +20 %. The low thickness tolerance (-12.5 %) is also applicable to the whole body of the nozzle.
- For elbows, the high tolerance (+20 %) is applicable to the whole body.

For roundness deviations, drawn or cut out templates can be used.

If necessary, the required reference plans (reference surfaces that can be used by the control technicians) are determined. The dimensions are transposed from the reference plans.

The control mainly concerns:

- the general dimensions according to the functional detail drawings
- installation/location of nozzles, bosses, supports, accessories
- the inclination of the nozzles
- squareness of the ends
- ovality and circularity
- dimensions between gussets
- functional gaps

The manufacturing drawings at the last revision are the reference.

The controller or the competent team leader / workshop manager informs the follow-up document, if this is required by the contract. He enters his name, the date of the intervention, its visa and enters the number of the report (as shown in the examination report template in Figure 18 and Figure 19) in the boxes provided for this purpose.

During the final inspection, the controller indicates the measured dimensions on the Control Plan, if there is a significant deviation. Otherwise, the verified dimension is simply underlined or circled.

If the follow-up document is not required, the controller writes his name, date of the intervention and its visa directly on the drawings, to attest to the control.

The annotated drawings are returned to the Design Office at the end of the manufacturing process for updating the drawings (CAE Conformance to Execution) and these drawings are kept until the end of erection of the installation.

The measurement of dimensions outside tolerances, for which it is no longer possible to restore conformity by machining, forming, etc... generates the establishment of a non-conformity.

5.6.3.5 Visual control of the elements of the exchanger (surface condition)

The examination conditions are as follows.

The quality of the surface finishes is estimated using visual-touch samples:

- Ra is ≤ 12.5 µm for raw surfaces,
- Ra is ≤ 6.3 µm for machined or ground surfaces.

The areas to be examined must be free of any material that may interfere with the examination and interpretation. The welds must be in their final state.

For maximum control efficiency, regarding illumination, it is necessary to ensure that especially:

a. To direct the light beam correctly on the area to be examined
b. To avoid glare
c. To optimize the color temperature of the light source
d. Use an illumination level compatible with the reflectivity of the surface.

The minimum illumination level of the surface to be examined shall not be less than 500 Lux. It is verified by a measurement on the surface under examination using a calibrated luxmeter, and valid.

Direct visual control is performed without interruption of the optical path between the operator's eye and the controlled area. This control may be carried out without or with visual aid, such as a mirror, lens, endoscope, or optical fibres.

In general, direct visual inspection can be carried out when access to the area allows the eye to be placed at a distance of no more than 600 mm from the surface to be inspected and at an angle greater than or equal to 30° from this surface. The examination is carried out only by eye (without another device).

Mirrors can be used to improve the angle of vision and aids such as magnifying lenses (max x6), endoscopes (rigid) and fiber optics can be used to facilitate the examination.

Indirect visual control is performed with interruption of the optical path between the operator's eye and the controlled area. Indirect visual control includes the use of a photograph or video camera, automatic systems and robots.

In cases where direct visual inspection cannot be performed, indirect visual inspection may be used instead.

Indirect visual inspection uses visual aid devices such as endoscopes, optical fibers coupled to cameras or any other appropriate instrument.

Instruments used for indirect visual examinations must have a resolution power at least equal to that of direct visual examination.

For operational staff, personnel must provide evidence of satisfactory visual acuity verified annually.

In case of direct visual examination:

These personnel are selected:

- either among the operators certified in non-destructive testing, or

- among personnel familiar with the development or manufacturing methods of the elements under examination like welders, pipe fitter.

In case of indirect visual examination:

Controllers performing indirect visual examinations are qualified and certified in accordance with MC 8000. This covers examination documents and realization of examination.

Agents performing indirect visual examinations are certified level 2 in Visual Inspection Method (VT) according to EN ISO 9712.

The visual examination is carried out at the phases indicated in the Quality Plan or follow-up document, according to the report in Figure 18 and Figure 19.

The examination criteria for the final visual inspection lies in cleanliness and absence of apparent defects.

To ensure cleanliness, it should be checked that the surfaces are free of dust, grease, oil, and ferritic pollution (scattered oxidation stains, including superficial rust stains are acceptable) and the absence of foreign bodies before the installation of special devices and means.

To ensure the absence of apparent defects, the internal surfaces of the nozzles are checked when accessible, as well as the internal surfaces drilled and bored holes. We make sure that there are no nicks, scratches, blows arcing, projections, dents, shocks or impacts that are detrimental to the use of the part, or to the operation of the equipment.

When an indication is detected, a non-conformity sheet is opened. It can proceed to a grooming completed by a surface examination. The possibility of elimination is verified by the measurement of the available over-thickness compared to the minimal thickness of calculation. The measurement method is adapted to the required accuracy. The actions to be carried out will be treated in the non-conformity sheet.

5.6.3.6 Examination report

When a review report is drawn up, it shall include at least the following information:

- The identification of the manufacturer, of the order and of the equipment,
- The identification of the piece, of the weld or of the area subjected to examination (with grade),
- The designation of the visual examination specification used,
- The stage of examination,
- The method and device used,
- The extent of examination,
- The result of interpretation,
- The name of controller,
- The date, the place of examination and the controller visa.

5.6.4 Thickness measurements by ultrasound procedure

In this part, we detail the procedure defining the methods for carrying out thickness control by UT measurement, outside the welded zone.

This procedure applies to the examination of surfaces after shaping or polishing operations requiring a re-checking of thickness.

This control will be called and referenced in the equipment follow-up document.

This control consists in particular:

- in case of forming, in checking of the slimming rate of the formed part (tense zone),
- in verification of minimal wall thickness on repaired or polished areas (to eliminate surface indications).

The measurements concern stainless steels and the thicknesses concerned are in the range of 1 mm to 36 mm for the manufacturing of CHX and DUHS exchangers.

5.6.4.1 Qualification personnel

The qualification of personnel for the measurement of material thicknesses is described in Standard NFEN14127 in § 5.6.

The Manager of controllers maintains a list of persons authorized for this type of control.

An operator performing ultrasonic thickness measurements must be familiar with the basic principles of ultrasonic physics, have a thorough understanding of ultrasonic thickness measurement and have a training in ultrasonic thickness measurement. In addition, the operator must know the product and material to be examined.

It is assumed that the ultrasonic thickness check is performed by a qualified and competent person. To demonstrate this qualification, it is recommended that personnel be certified in accordance with EN ISO 9712.

In accordance with the ESPN regulation and PED 2014/68/UE, the personnel must have been approved by a third-party entity recognized by a Member State.

5.6.4.2 Examination devices

An ultrasound device is using the reflection method. The devices are of the thickness measuring type and the translators used are those recommended by the manufacturer for the thickness ranges to be examined. Thickness examinations are performed exclusively with bi-element 0° optical transceivers with digital thickness measuring devices. Devices are checked annually.

A coupling medium, which is a contact gel compatible with the materials to be controlled. The coupling medium used for the control is the same as that used for calibration. When required, the chlorine and halogen content of the coupler must be ≤ 200 ppm. The coupling medium is systematically eliminated.

5.6.4.3 Examination operating mode

The calibration is carried out on a standard known block or on a part previously measured at the caliper or micrometer, either in thickness or in speed.

- The adjustment of the sensor delay is carried out according to the recommendations of the manufacturer of the device. For each transceiver, a “0” transceiver calibration is done.
- Adjust the read measure so that it coincides with the thickness values measured directly on the part to be checked or on individual hold (with parallel faces), and accessible to mechanical control (any calibrated and checked device with measuring precision < 1/10th of mm: caliper, micrometer…)
- Validate the propagation rate found in the material.

The calibration used on raw materials, uncoated, free of paint, or other deposits that can alter the measurements, is generally mode 1 of the Standard NF EN 14127.

Principles for measurement in mode 1:

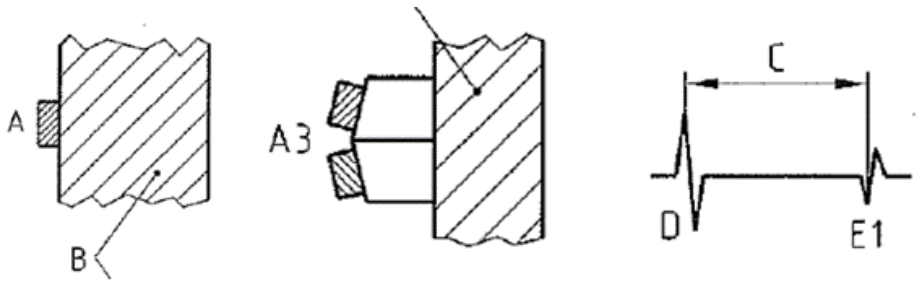

A: Transmission / receiving transceiver

A3: Separate transmission / receiving transceiver

B: Part to be controlled

C: Transit time

D: Emission signal

E1: back echo

- Saving defined parameters and start of the measurement series.

If the adjustment of the device is carried out as before on a known thickness of the part itself which can be measured mechanically, and close to or at the nominal thickness to be checked, the speed in the material is thus as accurate as possible. Calibration on the part itself allows measurement with reduced uncertainty due to calibration on the part itself, by transcending differences in possible structures (material with different grain sizes between the hold and the part).

The surfaces (to be controlled) must be free of paint, carbon deposit, dry coupling or any other product. The surface condition must not interfere with the transmission of waves in the part to measure measurement errors.

The roughness Ra of the calibration hold and part shall be less than 6.3 micrometers.

The faces of the components must be substantially parallel, a lack of parallelism that could lead to measurement errors or the impossibility of carrying out measurements.

Transceivers are selected to obtain a good coupling on the examination surface.

The examinations are carried out in a temperature range between 0° and +50° in order not to disturb the piezo-electrical elements of the transceivers.

Measurements are made punctually without continuous scanning. The controlled area and the number of measurement points must be sufficient and evenly distributed to ensure the minimum required thickness before / after forming.

These measures can be done by grid 50 mm x 50 mm a minimum, by linear, circular… methods. A schema of the realized measures is shown on the examination report (Figure 20).

PROCES-VERBAL DE MESURE D'EPAISSEUR
Thickness measurement report

fives

Société chargée de l'examen *Company in charge of*	Fournisseur / Fabricant **Fives** Lieu de fabrication / *Fabrication location*	N° Iso - Pièce - Plan indice *Item Reference*	PV N° FOLIO /
Client : Contrat : *Contract*	N° Cde Fournisseur - Fabricant	Epaisseur Nominale *Nominal Thickness* mm	Site / tranche

CONDITIONS TECHNIQUES ***Technical conditions***		***Suivant Procédure :***			
Mode d'élaboration du matériau *Material fabrication process*	θ° d'examen *Examination Température*	Marque produits *Products*	Type:	Lot / Réf	Appareillage utilisé *Apparatus used*
Laminé / *Rolled* ☐ Forgé / *Forged* ☐ Moulé / *Casted* ☐	Nuance *Grade* ……° C	Agent de couplage *Coupling médium* Réf de la cale étalon *Calibration bloc*			Marque - Type *Trademark - Type* N° identification *Identification N°*
Incertitude de mesure à prendre en compte *Measurement uncertainty*	0,25 mm Cas général sur cale *General case with step wedge* ☐	0,15 mm Mesure physique sur pièce *Calibration on base material itself* ☐	…… mm Autre *Other* ☐		Type de traducteur N° Ref - Ø - Frequence *Transducer type - Ref - Ø - Frequency*
	Avant TTH *Before PWHT* ☐	Après TTH *After PWHT* ☐	Sans TTH *Witout PWHT* ☐		
☐ Pièce brute Ra =	☐ Pièce meulée Ra =	☐ Pièce grenaillée Ra =			☐ Pièce revêtue

Plan de sondage et repérage des mesures
Sketch of measured points

Repère point mesure *Ref Point*	Epaisseur relevée *Thickness measured* (mm)
1	
2	
3	
4	
5	
6	
7	
8	
9	
10	
11	
12	
13	
14	
15	
16	
17	
18	
19	
20	

Epaisseur mini relevée *Thickness mini measured* mm

Epaisseur mini requise par calcul *Minimum thickness required by engeneering design* mm

Valeur mini compte tenu de l'incertitude *Thickness mini measured including uncertainty* mm

La valeur mini considérée avec l'incertitude est le résultat de l'application de la méthode C2.2 de la Norme EN 14137 : M ± inexactitude
The minimum considered value is the result of C2.2 method of Standard EN 14137 : M ± Uncertainty

Conforme / *Accepted* ☐
Non conforme / *Rejected* ☐

	Technicien	Contrôle technique (Si requis)	Client ou représentant client
NOM			
DATE			
VISA			

Figure 20: Bilingual thickness measurement report template

Thickness measurement by UT is usually carried out at the stage specified in the Quality Plan or follow-up document.

5.6.4.4 Measurement uncertainty

Standard uncertainty: under the "standard conditions" for thickness measurement, and according to the criteria of Appendix C of EN 14127, the uncertainty applied to measurements made in the base current area of the material (excluding welding and HAZ) is also applicable to formed areas and grinded or groomed areas, and is

Δ standard: ± 0.25 mm

We called "standard conditions" the measurements realized:

- With calibration on the part itself or hold of the same type of material fabrication process (rolled, forged…) and with similar acoustic characteristic,
- By possibly different operators on a series of measures,
- On thicknesses between 1 mm and 35 mm.

Reduced uncertainty: When "standard conditions" cannot be applied due to the low thicknesses involved, this standard uncertainty may be reduced to lower values ("reduced conditions"). In "reduced conditions", the uncertainty applied to measurements is

Δ reduced: ± 0.10 mm

We called "reduced / reduced conditions" the measurements realized:

- Calibration on the part itself by comparison and adjustment of the device with mechanical measurement,
- By a single operator performing the calibration and the measurement series,
- At constant temperatures during calibration and measurements,
- Calibration for each new measurement series,
- On thicknesses between 1 mm and 10 mm,
- With transceivers specific diameters adapted to important curvatures.

5.6.4.5 Acceptance criteria

Acceptance criteria are defined for each order in the follow-up document (and/or in calculation note and/or in drawings). The acceptance criteria are defined by the requirements of the code and are:

Measured thickness – uncertainty Δep > minimal calculation thickness + allowance thickness (corrosion...)

5.6.4.6 Suspicious areas treatment

An analysis must be performed to assess the consequences and/or risks of these doubtful areas on the next manufacturing actions or on the use of the equipment:

- If the consequences are not such as to call into question the final conformity of the material, the areas concerned are proposed in acceptance in the state with customer notice.
- If the conformity of the material can be called into question due to the integration in the equipment of these doubtful areas, they must be dropped or the impacted parts discarded.

5.6.4.7 Examination report

The results of the measurements shall be recorded in a report which shall include the following information:

- The designation of the applicable examination procedures,
- The identification of the manufacturer, of the order and of the equipment,
- The identification of the piece, of the area subjected to examination (with grade),
- The uncertainty value,
- The theoretical thickness value,
- The measured thickness value,
- The type measurement devices,
- The description of the measurement areas (sketch),
- The name of controller,
- The date, the place of examination and the controller visa.

5.6.5 Radiographic control procedure

The radiographic control procedure is established in the document in Appendix F.

5.6.6 Liquid penetrant test procedure

This technical part defines the procedures for the preparation, testing, acceptance or refusal of equipment for liquid penetrant examination (PT).

The conditions of examination and criteria defined in this document are those of the RCC-M and are to be applied on all controlled areas according to this procedure.

This technical procedure applies to the examination of welded areas and welds of assemblies for DUHS exchangers (for austenitic stainless steel) as template to be followed for any other heat exchanger.

This procedure concerns:

- Surfaces after grinding or machining operations,
- Base material (rolled, forged),
- Welds of pressure vessels, pipes or supports,
- Parts which have undergone forming operations.

5.6.6.1 Stage of realization and extent of test

Where required, liquid penetrant test shall be carried out on 100 % of external weld seams and 100 % of internal weld seams when accessible.

Back areas welds that are still accessible after welding but may be inaccessible by subsequent manufacturing operations will be examined by penetrant before losing access.

The weld inspection shall include the width of the joint and 15 mm on both sides of the base metal for pressure equipment, and 10 mm on both sides for the weld of supports.

The control of the base metal obtained, by different methods of production, of the parts, after any manufacturing operations, is defined in the follow-up document.

Surface examinations of surfaces to be welded are required for level 2 welds.

In the event of repair by welding, the extent of the area to be examined shall consist of the repaired area and 15 mm around that area.

5.6.6.2 Safety and environment

Certified personnel for penetrant test have to realize an annual medical examination for visual acuity.

The instructions established on the product safety sheets (or FDS) are to be respected.

Use of vinyl gloves and respiratory protection is recommended.

The rooms and areas where liquid penetrant examinations are carried out shall be:

- protected from external dust,
- aerated to prevent the personnel from being discomfort by fumes from the products used,
- illuminated sufficiently to allow an examination under a minimum illuminance rate of 500 lux at the surface of the part to be checked. The illuminance will be measured using a verified Luxmeter and within its validity period.
- adapted to the dimensions of the parts to be examined,
- equipped with adequate lifting means and positioning devices that are not contaminating.

5.6.6.3 State of material subjected to examination

The surface to be examined must be clean, degreased if necessary and dry, free from any product or irregularity which may affect the correct removal of excess penetrant and the correct interpretation of the indications.

The area cleaned must be large enough to prevent interference from surfaces adjacent to the surface to be examined.

Under these conditions, the surfaces of the welds in the final or intermediate state (root or filling runs) can remain raw.

The roughness Ra shall be not more than 6.3 µm for grounded and machined surfaces and not more than 12.5 µm for foundry unwrought or shot-blasted parts. Surface condition is assessed by comparison using visual touch pads reference.

For all parts, except foundry raw parts, sandblasting and peening operations before penetrant test are not permitted.

<u>Special precautions for mechanical cleaning</u>

Carbon deposit, slag inclusions, rust… must be eliminated by mechanical actions that are likely to cause surface contamination that can fill discontinuities. In all cases, but especially with sandblasting, we must ensure that discontinuities are not masked by plastic deformation or accumulation of abrasive materials. If applicable, additional chemical stripping must be performed, followed by proper rinsing and drying.

<u>Special precautions for chemical cleaning</u>

Residues must be eliminated with appropriate cleaning agents, which remove greases, oils, paints or attack products.

Residues from chemical cleaning may react with the liquid penetrant and significantly decrease its sensitivity. Particularly, acids and chromates can greatly decrease the colour of coloured penetrants. Also, chemical agents shall be removed from the surfaces examined after cleaning, using appropriate methods that may include water rinsing.

Special precautions on machined parts

The machined surfaces must remain raw for machining and must not undergo further mechanical treatments before penetrant examination.

Throughout the penetrant test operation, the temperature of the part to be examined and the products, when use, is between +10 °C and +50 °C. Temperature is measured with a verified thermometer.

In case of impossibility (external test, on site, etc.), the minimum temperature can be reduced to +5 °C.

For tests performed at less than +10 °C, the developer chemical must be applied by spraying or aerosol dispenser with a use temperature about +20 °C. In addition, the drying shall be accelerated by air blowing, if possible hot, without the temperature of the surface of the part exceeding +50 °C.

5.6.6.4 Personnel

The penetrant examination shall be carried out at least by certified PT level 1 personnel, under the responsibility of a certified PT level 2 operator. The interpretation will be performed by a certified agent at a minimum level 2 PT. The certification is carried out by one of the following committees: NF ENI SO9712 COFREND, “Constructions Métallurgiques et Soudage” committee, etc.

Operators must have a valid visual acuity of less than one year.

5.6.6.5 Used products

The family of penetrant test products complies with EN ISO 3452-2 with a minimum sensitivity of 2. The pairs penetrant – developer chemical are compatible with each other and come from the same manufacturer.

The conformity report of the used products must be available and the products are used during their validity period.

→ Cleaning product

Lint-free and dry rags and organic solvent: BABB-CO N120 or any other recognized product compliant with requirement F6400 RCC-M.

→ Penetrant liquid

Coloured pre-emulsified visible in daylight or white light (water rinseable): BABB-CO DP55

→ Rinsing

Water and lint-free rags.

→ Chemical developer

Wet with volatile carrier: BABB-CO D100.

Equivalent products from another manufacturer may be used. But under no circumstances, products from different manufacturers can be mixed. The complete product line (degreaser – penetrant liquid – developer chemical) is therefore from one and the same manufacturer.

The products used are of a non-halogenated type for austenitic steels. The Control department holds the certificates attesting the conformity of each batch.

For test according to this procedure, the used products meet EDF requirements. The products are classified as "PMUC" and the sulphur and halogen (Cl + F) contents are less than 200 ppm for use on austenitic steels and nickel-based alloys.

5.6.6.6 Examination method

Since the surfaces have been prepared, the procedure given in Figure 21 is followed.

The product used is a pre-emulsified penetrant liquid visible in daylight or white light and wet developer chemical with volatile solvent.

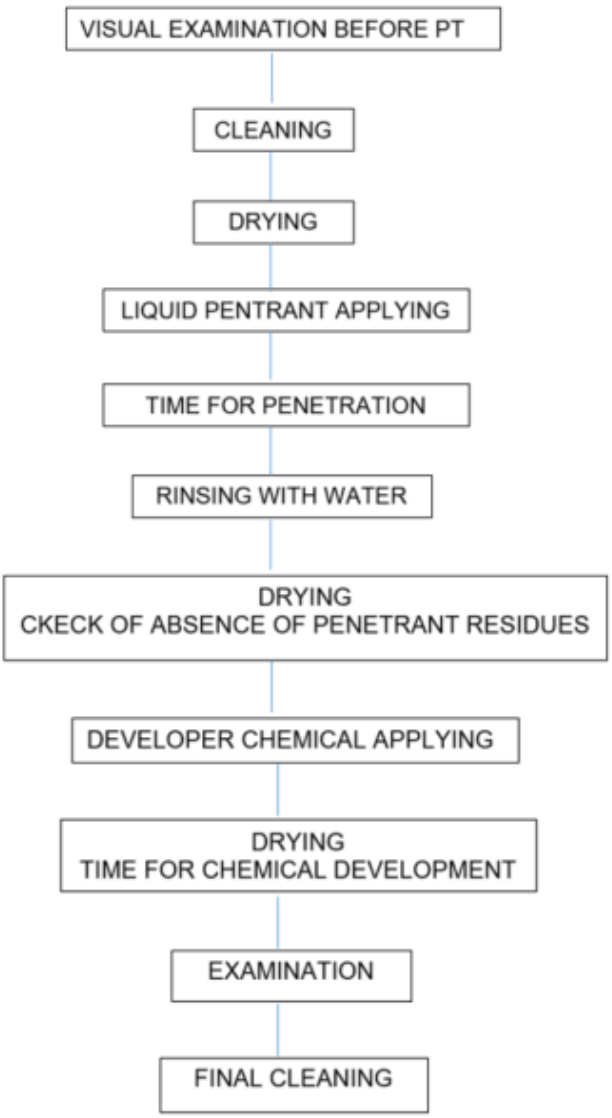

Figure 21: Operational mode of test

This procedure begins with a visual examination prior to penetrant test.

→ Penetrant product:

- application of penetrator by spray (aerosol spray) or brush
- impregnation lasting at least 20 minutes but not more than 60 minutes; the penetrating product layer must always wet the surface and the penetrating product must remain moist throughout the impregnation period.

→ Elimination of penetrant excess:

- The excess penetrant removal product must be applied in a manner that maintains the penetrant in the discontinuities.
- If water is used, excess penetrant must be removed by washing (rinsing) with a clean, lint-free, slightly damp cloth,
- In the case of use of a solvent, the excess penetrant must first be removed with a clean, lint-free cloth and then by cleaning with a slightly dampened solvent cloth.
- Solvent spraying directly on the surface to remove excess penetrant is prohibited.

→ Verification of elimination of penetrant excess:

- Without rubbing the surface persistently, verification of the absence of residual penetrating after passing a clean, clean, wet, lint-free white cloth,
- During removal of excess penetrant, the surface must be visually checked to ensure that it does not have any penetrant residue. The illuminance on the surface to be examined must be greater than 350 Lux.

→ Drying:

- by natural or forced evaporation by blowing oil-free dry air with as little pressure on the surface of the part as low as possible,
- by wiping lightly with a clean, dry, lint-free cloth (avoid rubbing energetically to avoid extracting the penetrant from certain discontinuities).

→ Chemical developer:

- application of the chemical developer in a thin and uniform layer after a good homogenization of the aerosol dispenser. The homogeneity of the developer chemical must be maintained during use,
- examination: the controller must take care to observe the formation of indications immediately after the drying of the developer to obtain information on their nature. The observation is done with a surface illumination of at least 500 Lux controlled by a luxmeter checked annually.

An initial examination must be performed immediately after application and drying of the developer. This is particularly useful when, during revelation, the characteristics of the indication change to the point where they are not anymore representative of the defect that caused it.

The duration of revelation is between 10 min and 30 min. The evaluation of the indications begins immediately after application and drying of the chemical developer up to 30 minutes. Longer time may be required when a greater sensitivity is wanted, this time will not exceed 60 minutes.

- Recording of results.
- Elimination of residual products, final cleaning (water and rags with air drying).

5.6.6.7 Acceptance criteria:

The following acceptance criteria apply when surface checks are required:

- The indications are characterized by their dimensions. They are classified in linear or rounded.
- An indication is called linear when its largest dimension is greater than three times the smallest. The other indications are called rounded.

→ Surfaces to be welded (rolled and forged parts)

Only indications > 1 mm are taken into account. On bevels or parts receiving welds, are not acceptable:

- The linear indications,
- The rounded indications with a larger dimension > 2 mm,
- The indications aligned to the number of 3 or more, spaced less than 3 mm from edge to edge,
- The number of 12 or more grouped indications on a rectangular surface of 100 cm² chosen in the most unfavorable way in relation to the indications, without its greater dimension exceeding 20 cm.

→ Welds on equipment: test after welding

Only indications > 2 mm are taken into account. However, any alignment of more than 20 mm of close-up indications (even smaller than the rating) shall be subject to further analysis in order to determine their nature.

For welds level 2, are not acceptable:

- The linear indications,
- The rounded indications with a larger dimension > 4 mm,
- The indications aligned to the number of 3 or more, spaced less than 3 mm from edge to edge,
- The number of 8 or more grouped indications on a rectangular surface of 100 cm² chosen in the most unfavorable way in relation to the indications, without its greater dimension exceeding 20 cm.

→ Scouring repair

The entire scoured area is examined. Where the scour is entirely located in the welded metal part, any indication greater than 1 mm shall be unacceptable.

→ Repair areas by welding

The examination area concerns the deposited metal and a 15 mm area at the periphery.

During welding repairs, repaired areas are assessed according to the same criteria as the original area concerned.

→ Other cases (forming according to F4000)

Only indications > 1 mm are taken into account.

Are not acceptable:

- The linear indications,
- The rounded indications with a larger dimension > 3 mm,
- The indications aligned to the number of 3 or more, spaced less than 3 mm from edge to edge,
- The number of 5 or more grouped indications on a rectangular surface of 100 cm² chosen in the most unfavorable way in relation to the indications, without its greater dimension exceeding 20 cm.

For the faces and edges of plates, the same criteria are applicable. However, on the edges of stainless-steel sheets are tolerated:

- Linear indications of length ≤ 8 mm for plates of thickness ≤ 40 mm,
- Linear indications of length ≤ 10 mm for plates of thickness > 40 mm.

→ Recharging welds and buttering

The entire area recharged or buttered is examined. Only indications > 2 mm are taken into account. However, any alignment of more than 20 mm of close-up indications (even smaller than the rating) shall be subject to further analysis in order to determine their nature.

For welds level 2, are not acceptable:

- The linear indications,
- The rounded indications with a larger dimension > 4 mm,
- The indications aligned to the number of 3 or more, spaced less than 3 mm from edge to edge,
- The number of 8 or more grouped indications on a rectangular surface of 100 cm² chosen in the most unfavorable way in relation to the indications, without its greater dimension exceeding 20 cm.

→ Welds supports (according to H1411-H4534)

Indications > 2 mm are not taken into account. However, any alignment of more than 20 mm of close-up indications (even smaller than the rating) shall be subject to further analysis in order to determine their nature.

Are not acceptable:

- The linear indications,
- The rounded indications with a larger dimension > 4 mm,
- The indications aligned to the number of 3 or more, spaced less than 3 mm from edge to edge,
- The number of 8 or more grouped indications on a rectangular surface of 100 cm² chosen in the most unfavorable way in relation to the indications, without its greater dimension exceeding 20 cm.

5.6.6.8 Traceability of non-conforming tests

The purpose of these requirements is to document scours likely to reveal drift of manufacturing.

Cases where no indication is permitted: any indication must be reported before it can be eliminated.

Cases of wrought products: if indications appear to be due to insufficient surface preparation, it is possible to carry out grooming and re-penetrant test before final characterization/examination. If after this grooming, the indications remain unacceptable, they must be the subject of an examination report before being eliminated.

Case of casting products and welds: if indications appear, it is permissible to proceed with a “controlled” elimination, and a new penetrant test, before final characterization. This “controlled” elimination can continue until there is no challenge of dimensional compliance, of the capacity of volume examination, or the need for repair by welding. If after this “controlled” elimination, the indications remain unacceptable, they must be the subject of an examination report before being eliminated.

5.6.6.9 Examination PT report

An examination PT report shall be realized after each examination operation. The examination PT report shall include at least the following information:

- The identification of the manufacturer, of the order and of the equipment,
- The identification of the piece or of the weld subjected to examination (with grade and material fabrication process (rolled, forged…)),
- The designation of the applicable examination procedures,
- The stage of examination,

- The method of preparation of surfaces,
- The information concerning the liquid penetrant products (type, reference…),
- The procedure of the examination (method of application of the penetrant, time, compliance with the temperature and illumination),
- All indications outside the criteria observed must be noted. The indications initially considered out of criterion, interpreted as not characteristic of an unacceptable defect, and therefore ultimately not considered must be the subject of a comment,
- The results of the interpretation are given by noting the position and dimensions of the unacceptable indications, possibly on a sketch,
- Identification of the Company responsible for the examination in the event of subcontracting,
- The name and the certification of controller,
- The date, the place of examination and the controller visa.

5.7 Brazing qualification proposition

The previous chapters about the examinations that need to be applied to the welds, are not systematically applied to brazed part, for the reasons listed below:

- It is difficult (sometimes impossible) to control via the usual means the entire brazed joints inside the equipment
    - Considering a corrosion allowance is very difficult
    - Internal corrosion cannot be controlled by the classical means

For these reasons, brazing procedure for parts assembly is still under assessment for future approval by the existing nuclear codes.

The major technological gaps we are facing in this field are the following:

- Select the appropriate material data for brazing (high temperature strength, creep rupture, creep/fatigue, etc …)
- Appropriate methods to ensure the structural stability of the brazed heat exchangers
- Determine methods to inspect brazed heat exchangers and failure modes
- Demonstrate that the proposed rules are acceptable

These points constituted also the scope of work for a draft code case of CHX assembled by diffusion bonding in nuclear applications in ASME code Section III, Division 5 [19].

According to the literature [20] [21] and our work on defining propositions of tests types to validate the structural stability of the heat exchangers assembled by brazing, we suggest the following:

→ Materials data

- To perform systematically tests on brazed alloys specimens to determine material properties, allowable stresses and design curves up to 30 000 hours or more.
- Develop novel test setups and perform tests to determine performance of brazed channels under steady and cyclic loading at elevated temperatures, establishing protocols for testing of these complex geometries.
- Conduct post-test inspection and analysis of exercised heat exchangers documenting changes in channel geometry and investigating areas of potential high stress.
- Study of the microstructure and mechanical properties of both samples of brazed blocks and of actual heat exchangers. This may lead to new brazing procedures for the manufacturers and can also be used to help improve brazing procedure.

- Evaluate the performances of channelled specimen via mechanical testing at room and high temperatures, such as tension tests, fatigue tests, creep tests, and creep-fatigue tests with peak strain dwell.
- Determine the failure mechanisms of brazed blocks affected by channel configurations.

→ Structural stability

- Perform tests on mock-up heat exchangers inserted in loops similar to sCO2-4-NPP loops, under steady state, transient states, start-up/shut-down, freezing and thermal shocking, in different environments to investigate the thermohydraulic performances of the heat exchangers in high pressure and/or high temperature sCO2
- Develop test bed to investigate fouling and clogging issues and study ways to remove potential clogs in specific channels
- Understand optimal headers designs to establish uniform flow through individual channels and to assess issues associated with thermal stress at the header locations
- Assess the effects of operational issues such as corrosion and freezing

→ Inspection methods and failure modes

- Ultrasonic detection was proven to be a reliable method to detect failure in the solid perimeter of heat exchangers (REF) with the means of optimization of this technique and establishing the detection and sizing capability.
- Install permanently strain gauges technology to detect propagation of cracking within the channelled core of the heat exchanger. This will allow to perform health monitoring of the heat exchangers during their operation. Fives Cryo had an important expertise in real-time monitoring of equipment field. More work needs to be achieved to determine how in-situ sensors affect thermal performances and how predictive they can be to predict the life of the equipment.
- Detailed microstructural characterizations are to be achieved at failure locations to understand the role of the channels in the failure of brazed heat exchangers.
- Investigate the failure mechanism in the core-header bond in details.

5.8 Cleaning procedure

The purpose of this part is to define for the CHX and DUHS exchanger:

- The cleanliness provisions applicable to all manufacturing steps,
- The procedures to be applied for cleaning,
- The control of cleaning.

This technical procedure applies to the CHX and DUHS exchanger:

- RCC-M Quality Level: Level 2
- ESPN Classification: Level N3
- Fluid CHX: steam, water / Supercritical CO2,
- Fluid DUHS: air / Supercritical CO2.

The cleanliness shall be established, at the latest, during the last stage of manufacture enabling the realization and the control of the applicable criteria. Cleaning operations take place at the last stage of manufacture and before each hot work (degreasing). After cleaning, all precautions are taken to preserve the cleanliness

obtained, until the packaging. However, precautions shall also be taken during manufacture to prevent any contamination.

The manufacture of exchangers takes place almost entirely in a specific dedicated workshop. Cleanliness is done in the workshop. For any operations carried out outside this workshop, measures are taken to prevent the risks of ferritic pollution.

The grades for exchangers are Z2CND17.12 and Z8CNDT18-12: austenitic stainless-steel group 3.2 according to RCC-M Appendix Z. The exchangers have corrosion resistant surfaces.

According to RCC-M F6000, the exchangers belong to cleaning group B (F6210) with a work area III (F6230).

Work area means the immediate environment of the equipment or some of the equipment. The concept of working area is to be taken into consideration only from the first cleaning operations concerning the equipment and for subsequent operations which may call into question the cleanliness obtained. Work areas may be permanent or temporary.

The critical surfaces are:

- the surfaces of heat exchanger tubes or equivalent (fins), and
- the surfaces subjected to friction (bearings, bearing surfaces, gasket surfaces...)

The other surfaces are not critical.

The visible surfaces are the surfaces visible with eye (without device) or using an endoscope. The no visible surfaces are the surfaces that do not meet the previous definition. In addition, the nozzle with diameter < 6’’ are considered as no visible surfaces.

5.8.1 Requirements concerning pollution agents

5.8.1.1 During fabrication and before cleaning

The following provisions are to be taken into account, including for intermediate storage and handling:

- Tools, grinding wheels, slings used during the various manufacturing and handling operations must be used exclusively for stainless steels,
- The material used for carbon steel shall not be used for stainless steel without prior cleaning,
- All necessary precautions are taken to avoid any surface striations, scratches or tearing. Movable protective panels are placed to limit splashing during grinding or welding,
- The polishing is made with abrasive lamella wheels with a satisfactory quality and suitable for stainless steel,
- If cleaning or intermediate degreasing is performed during prefabrication, only authorized products shall be used,
- Contact with ferritic steel lifting and handling equipment is prohibited,
- Grinding: the grinding wheels are made of alumina, free of iron and reserved for this use only,
- Brushing: the brushes are made of stainless steel or nylon and reserved for this use only,
- Cutting tools: if possible, tungsten carbide,
- Manual assembly tools: if possible, in stainless steel or chrome-vanadium.

The following products and materials must be PMUC (Products and Materials Used in Power Nuclear Station):

- Packaging materials (plastic covers, shutters…),
- Products of dye penetrant test (penetrating or revealing) or of other NDT,
- Machining lubricants on austenitic steel surfaces,
- Soluble paper or temporary sealing pads for back protection of welds,
- Adhesive tapes (for packaging, radiographic films…)

All these products are eliminated before the surfaces become inaccessible.

Adhesive tapes, residues (adhesives) and varnishes are completely removed from surfaces of the material before any operation (manufacturing, inspection) or intervention that would make inaccessible surfaces and prior to any operation that would lead to a temperature increase of the equipment or part in question.

5.8.1.2 After cleaning

The preceding provisions shall continue to apply in addition to the provisions of this paragraph. The following chemical elements are prohibited as basic constituents of products and tools that may come into contact with the cleaned surfaces:

- Cl, F, Pb, Hg, S, As,
- Nitrite,
- Chromate,
- Phosphates.

5.8.2 Work area during and after cleaning

During and after cleaning, the work area is Level III according to RCC-M before vacuum packaging. For the work area III, the requirements are the followings:

- Pollution: all precautions are taken to limit the risk of pollution by personnel (food, drinks, cigarettes…),
- Emission of dust: in the case of simultaneous execution of civil engineering, manufacturing and assembly works, these works are regulated,
- Floor cleaning: the cleaning of the floor is weekly; the fixed frequency can be reduced or increased, depending on the work,
- Identification of the area: the area is demarcated by physical means on site (optional in the workshop).

5.8.3 Mechanical cleaning

Before cleaning, local oxidation marks may be removed by grinding or brushing with tools reserved exclusively for stainless steels.

Mechanical cleaning is not suitable for removing grease or lubricant.

The mechanically cleaned surface will be degreased beforehand.

Parts are degreased and then mechanically cleaned.

During grinding operations, local heating is avoided.

Only surface grinding with an abrasive blade grinder can be tolerated if performed after a hydraulic test.

5.8.4 Chemical cleaning

5.8.4.1 Degreasing

Degreasing before heat treatment and before pickling are mandatory. Degreasers are to be made with acetone, ethanol or "Alcatum".

N120 degreasing can be used, for example, to degrease the bevels and to degrease before and after dye penetrant examination.

For degreasing of small areas, acetone, ethanol or "Alcatum" pre-impregnated in a cloth may be used with the following processes:

→ Method with solvent:

- Rub the surfaces (to be degreased) with a clean solvent-impregnated cloth. Do not flush the surface of the component at this degreasing stage, it would lead to dispersion of contamination. This step can be repeated as many times as necessary.
- Rub the surface with a solvent-impregnated cloth, then immediately rub with a cloth impregnated with grade C water and finally absorb all the liquid from the surface of the component using a clean and dry white cloth. The chemical composition of the water is described in Figure 22.

		GRADES			Eau courante
		A	B	C	
Chlorures	(ppm maximum)	0.15	1.0	25	100
Fluorures	(ppm maximum)	0.15	0.15	2.0	5
Conductivité	(µS/cm) (microSiemens/cm)	2.0	20	400	-
Résistivité	(Ω.cm)	500,000	50,000	2,500	-
Total des solides	(ppm maximum)	-	-	-	500
Solides en suspension	(ppm maximum)	0.1	-	-	-
SiO_2	(ppm maximum)	0.1	0.1	-	-
pH		6.0-8.0	6.0-8.0	6.0-8.0	5.5-8.0
		aucune turbidité, huile ou dépôt			

Figure 22: Table of water quality

→ Method with pre-impregnated wipes “Alcatum”:

Rub the surface to be degreased until all contamination is removed. Then rub the surface using a water-impregnated (possibly hot) grade C cloth and finally dry the surface with a clean, dry white cloth.

→ Method for degreasing with the cleaning agent "Alcatum":

The product can be applied manually or by spraying. The action time is approximately 10 minutes to 15 minutes during which the efficiency of degreasing can be increased by using a nylon brush. The treatment will be followed by a high pressure water rinse (possibly Hot) (water Grade C).

Surfaces can also be degreased by immersion in a phosphoric acid bath.

→ Verification of degreasing efficiency:

Degreasing efficiency is judged by large water test or water spray test. If necessary, degreasing can be done as many times as necessary.

UV verification can be used when water treatments are not appropriate.

5.8.4.2 Pickling

The provisions of 5.8.1.1 must be respected. Before pickling, degreasing is carried out under the conditions described above.

Immersion pickling is done in a dilute fluonitric solution. Pickling is done by immersion in a tank. The immersion time is from 30 minutes to 2 hours 30 minutes maximum, depending on the temperature of the bath, the state of the bath and the temperature of the rooms.

The replacement of the solution in contact with the part to be stripped is ensured either by stirring the bath with the help of a pump, or by moving the part regularly in order to guarantee sufficient stirring. The successive interval between movements is determined so as to guarantee at least 4 movements per hour during a pickling operation.

Any other method that ensures a good agitation of the bath can be used.

During pickling, the position of the slings on the part will be changed to ensure a homogeneous pickling, especially in the sling area. A visual check is made when the slings are moved.

5.8.4.3 Passivation

For parts which have been pickled by immersion, passivation is carried out by air; the parts are stored for a minimum of 24 hours in a clean room and free from ferritic contamination and agent liquids or gases.

5.8.4.4 Rinsing

Final rinsing is done with grade B water. Rinsing is completed when the pH of the water is stabilized within acceptable limits for the water quality under consideration.

5.8.4.5 Drying

After rinsing, the drying is done after removal of the remaining water. Sufficient inclination shall ensure natural flow (no standing water should remain). The drying is carried out by one of the following means or by combination of these means:

- simple evaporation with air,
- using clean cloths,
- Hot air blowing: this air must be dry and oil-free and at a temperature between 60 °C and 80 °C,
- by vacuuming with heating:
  - applies only to vessel resistant to external pressure,
  - drying is considered complete when the vacuum (about 1 mm of Hg) is maintained without pumping for 30 min,

Air can be replaced by nitrogen, argon, helium.

5.8.5 Control of cleaning

Once the cleaning has been carried out, the degree of cleaning of the surfaces is checked to ensure that the required quality has been obtained.

Tests A, B are to be carried out by sampling, at least on doubtful areas. Unless specifically required by the Customer specified in the order, cleaning tests A, B and D must be carried out by sampling on the parts of the work area and/or work area concerned, at a rate of one piece per month, preferably on suspicious surfaces.

Are considered as suspicious areas:

- Areas that appear to be the least clean during an overall visual examination of the part (at a distance greater than 1 m and without any particular lighting mode),
- Areas presenting difficulties of interpretation to one of the cleaning tests already carried out.

The following tests are carried out and the following criteria applied (see definition in Appendix G):

Table 25: Cleaning tests depending on corrosion surface resistance

Cleaning group	Corrosion resistant surfaces	
	Critical surfaces	Other surfaces
	Test A criterion 2	Test A criterion 4
B	Test B criterion 6	Test B criterion 6 (*)
	Test F criterion 10	Test F criterion 11
	Test E criterion 6	-

(*) Test A is supplemented by a test B only if it shows suspicious areas.

The F tests mentioned above are performed when a cleaning check is required, after accidental degradation of this condition, for surfaces that are not any more accessible and in the case that disassembly is not carried out to restore the required state of cleaning.

For non-visible piping, the tests A, B, where prescribed above are to be carried out only at the ends of piping.

The tests are complementary and must be performed in order.

All necessary measures are taken during the execution and evaluation of the tests, in order to preserve the cleanliness of all areas.

If the result is not acceptable, a non-conformance sheet shall be opened.

After analysis of the causes of the non-compliance, a mechanical clean-up of the affected area or a local paste treatment is carried out. New cleaning and control operations will be described in addition in the follow-up document.

5.8.6 Personnel in charge of control cleaning

The personnel implementing the controls described in this procedure shall be independent of the production staff and shall belong to the Control Department.

5.8.7 Protection, storage, erection, transportation

This clause defines the conditions for packaging, transport and storage. It applies to equipment after manufacture and final cleaning.

→ Packaging

After hydraulic test, the equipment is dried, vacuum-packed, and filled with nitrogen. The protection of the cleaned equipment is ensured by a sealed package. It is carried out in a working area III according to RCC-M. Packaging products and materials directly in contact with the parts of equipment are PMUC.

Plastic cloths for packing parts shall be:

- Waterproof against moisture and vapor,
- Hot weldable,
- Puncture and tear resistant,
- Contain less than 0.10 % by weight of halogen or sulphur,
- Allow visual control without opening (transparency).

Cellulosic materials (wood, cardboard, paper, etc.) and all adhesives are strictly prohibited inside the containment envelope.

A maximum of air will be removed from the envelope: if necessary, excess air will be sucked in by a vacuum pump or vacuum cleaner. Hot sealing will be performed immediately after air extraction.

The openings of the equipment are closed by the temporary materials used for the inerting. No other means is to be provided.

The pressure of the inert gas inside the equipment is controlled.

The packaging envelope is checked after each handling.

During handling, placement and cushioning, all precautions are taken to avoid perforations or tears in the envelope. In case of a tear, it will be repaired by hot sealing.

In the event of deterioration that may call into question the established level of cleanliness, checks and new cleanings shall be carried out.

A label identifies the contents clearly and unambiguously and is attached to the outside of the package.

This marking clearly and unambiguously indicates all the instructions required for shipping, handling and storage. It is composed, as described below:

- The sender’s address,
- The address of the consignee,
- From the place of delivery,
- The order number,
- The equipment number,
- The date of packing,
- Net and gross mass,
- The dimensions,
- Packaging pictograms for handling (center of gravity, stacking, etc.)

Marking is made by printing inscriptions with indelible ink or paint, on 2 sides adjacent vertical.

The marking is adapted to the size of the packaging and can be indicated on a rigid plate (plastic, metal, etc.) if necessary. This plate is inseparable from the packaging.

The packaging is individual.

Wedges, shoring, padding are used to ensure mechanical conditioning. Expanded polystyrene calibration beads are prohibited.

→ Storage

The equipment is temporarily stored in a workshop in a storage area complying with the requirements of working areas III defined by RCC-M.

During all storage, the protection of the packaging is kept in place, except for inspection purposes in agreement with the manufacturer and client. After inspection, the packaging and protections are reconstituted.

The materials are stored on pallets or props. Throughout the storage, the control of the inerting of the equipment is checked periodically.

The lifetime of the packaging is planned for 5 years of storage under client store conditions.

→ Transportation / handling

Contact of equipment with ferritic steel (lifting and handling equipment) is prohibited.

Before any handling and lifting, an environmental check is made to ensure that there are no obstacles. Handling follows state of the art practices.

The lifting devices will be adapted to the parts to be lifted: bridge, slings adapted… These lifting devices are periodically checked. Special attention will be taken to avoid shocks when putting in truck.

The packaging will be stowed.

Open vehicles may be used for the transport of packaged equipment where the nature of the packaged equipment, the surface protection and its conditioning allow it to be exposed without damage to the environment (runoff and rainwater).

Equipment carried on an open vehicle must be adequately protected from the environment by impermeable tarpaulins.

Arrangements will be made to ensure air circulation and prevent condensation.

5.8.8 Documentation

Cleaning operations are described in the follow-up document. In the follow-up document, the cleaning operator mentions the revision of the document applied, its name and the date of completion of the cleaning, the date and signature.

5.9 Final visual examination at the end of manufacturing

This part presents the procedure that defines the methods for carrying out direct or indirect visual control of the equipment at the end of manufacturing in compliance with the follow-up document.

The definition of Reverse Accessibility is welds on equipment/piping Ø < 10'' which are considered inaccessible on the reverse side of welded joints. The welds are considered inaccessible in the following cases:

- On equipment / pipes of 10''≤ Ø < 20'' up to 400 mm from the ends.
- On equipment / piping of 20'' ≤ Ø ≤ 22'' up to 1.5 m from the ends.
- On equipment / piping Ø > 22'' over their entire length.

5.9.1 Operational staff

The personnel assigned to the visual control are experienced and are informed of the criteria specified in this procedure.

The final controls as mentioned on the follow-up documents are carried out only by personnel of the control department, whose visual acuity is checked annually in accordance with the requirements of standard NF EN ISO 9712.

5.9.2 Examination conditions

The areas to be examined must be free of any product that may interfere with the examination and interpretation. The welds must be in their final state.
For maximum control efficiency, concerning the illumination, it is necessary to ensure that especially:

- To direct the light beam correctly on the area to be examined
- To avoid glare
- To optimize the color temperature of the light source
- To use an illumination level compatible with the reflectivity of the surface.

5.9.2.1 Lighting

The visual examination is carried out in natural or artificial light, sodium vapor lamps are prohibited. The recommended illumination for a detailed examination of the room is 500 Lux.

The illumination level of 500 Lux is verified by a measurement performed on the surface under examination using a calibrated and valid Luxmeter.

5.9.2.2 Accessibility – Safety

- The part must be placed judiciously so that it is accessible from all sides. Especially in the case of large dimensions, it will be possible to examine the lower part, using portable lighting and a mirror if necessary.
- The element must be immobilized in such a way that the assembly is stable and there is sufficient space to carry out the control.
- The angle of vision is greater than or equal to 30°.

5.9.2.3 Direct visual examination

Visual control is performed without interruption of the optical path between the operator’s eye and the controlled area. This control may be carried out without or with visual aid, such as a mirror, lens, endoscope, or optical fiber.

In general, direct visual control can be carried out when access to the area allows the eye to be placed at a distance of no more than 600 mm from the surface to be inspected and at an angle greater than or equal to 30° from this surface. The examination is carried out only by eye (without another device).

Mirrors can be used to improve the angle of vision and aids such as magnifying lenses (max. x6), endoscopes (rigid) and fiber optics can be used to facilitate the examination.

5.9.2.4 Indirect visual examination

Visual inspection with interruption of the optical path between the operator's eye and the controlled area. Indirect visual control includes the use of a photograph or video camera, automatic systems, and robots.

In some cases, indirect visual control may replace direct control. Indirect visual control may use visual aid devices such as endoscopes, optics fiber coupled to cameras or any other appropriate instrument. In this case the agreement of the Contracting Parties is required.

Instruments used for indirect visual examinations must have a resolution power at least equal to that of direct visual examination.

5.9.3 Examination stage

The final visual examination is carried out at the stages indicated in the follow-up document:

- Before the hydraulic test,
- After the hydraulic test.

The risk analysis for materials field related to the main risks defects that may occur during the assembling and welding phases.

All internal and external surfaces are affected by the visual examination.

Early visual examination may be required during manufacture for all inaccessible areas prior to hydraulic testing (by direct or indirect method).

These steps are identified in the follow-up document.

The fins are not visible, accessible after equipment closing. Thus, an advance visual examination of fins and of internal parts is required before the closing of exchangers.

All external surfaces where reinforcing plates are positioned, or where definitive parts (lifting lugs…) are welded, must be visually inspected in advance.

5.9.4 Final visual control before and after hydraulic testing

The visual controls described below will be carried out according to the criteria defined in the procedure for visual and dimensional welding control and in the procedure for visual and dimensional equipment control.

The requirements resulting from the risk analysis, concerning the surfaces and dimensions to be visually inspected are indicated on the general or detailed drawings. The relevant surfaces are checked for the following systematic according to the DNRE procedure.

5.9.4.1 Visual control before hydraulic test

The visual examination takes place in 3 steps:

- Step 1: Checking the completeness and dimensional conformity of the components
- Step 2: Checking the conformity of the weld seams and heat-affected zones
- Step 3: Checking the general surface condition of the components

Step 1: Checking the completeness and conformity of the equipment

The aim of this stage is to check that all the final components of the equipment are assembled in accordance with the manufacturing drawings (dimensional control of what can be checked at this stage of the

manufacturing process). This control is carried out at the end of the manufacturing process. The customer and/or the notified body are invited according to the notification points present in the follow-up document. All the blocking reserves for hydraulic tests are traced to be solved prior to the launch of the hydraulic test.

Step 2: Checking the conformity of the weld beads and heat-affected zones

Overall examination of the welds that remain visible, in addition to the acceptance of the intermediate examinations at the various previous stages. These previous examinations on the welds and heat-affected zones are carried out according to the steps mentioned in the follow-up document before carrying out a manufacturing phase which would make them inaccessible later.

These examinations are carried out in application of the visual examination of welds procedure.

Thus, all internal surfaces are seen before the hydraulic test is carried out.

Step 3: Checking the general surface condition of the components

This visual control is the finalization of the various stages of intermediate visual controls, depending on the surfaces made inaccessible by the assembly phases. These successive examinations are registered with the follow-up document.

The overall examination is carried out in 2 stages:

- The visual control of the interior surfaces before closing for testing:

Global examination of the surfaces remaining visible, in addition to the acceptance of the intermediate examinations at the various previous stages according to the visual and dimensional equipment control.

Unusual discoloration and migrating bodies are not acceptable for visual examination of surfaces.

The absence of migrating bodies is ensured at the various stages of manufacture by successive visual examinations, and by the precautions taken to avoid polluting the surfaces examined beforehand.

Note: This absence of migrating bodies is checked at the end by the ''F'' test during emptying after the hydraulic test according to the procedure cleaning.

- The visual of the external surfaces after closing for testing.

The purpose of this control is to assess the surface condition of the equipment components. The surface condition is considered satisfactory if no grease or dirt is found, and the walls and accessories are not deformed.

For stainless steel surfaces, surface and scattered rust stains are acceptable, provided that the total cumulative area of the stains remains less than 1 % of the total area.

The imperfections listed below are acceptable if their dimensions are judged to be small by qualified and authorized personnel.

For the heat-affected zones, the acceptable imperfections are the same as those for the running parts (see below) if they do not call into question the correct execution and interpretation of the non-destructive testing (NDT).

For standard parts, the acceptable imperfections are the following, if they guarantee the minimum thickness of the component. They can be softened by light grooming:

- scratching (scratching, rubbing),

- shock (impact, cavity, mark, local tearing or tearing, notch, matting),

- loss of local thickness due to descaling, grinding.

A circumferential indication affecting more than 1/4 of the periphery is non-conforming and will be treated as a deviation, if the thickness at the bottom of the indication does not comply with the minimum required thickness.

If an important indication during the final visual control at manufacturing end (before hydraulic test) was carried out (occurred during handling or other, since the visual control of the equipment), it is then processed according to visual and dimensional equipment control.

Report of final visual examination before the test

An examination report is systematically made for each visual control at the end of the manufacturing process before hydraulic test.

This report records the results of all 3 steps of the controls described above. In case of deviation(s) observed during the visual control, a new control will be performed after processing of the deviation(s).

5.9.4.2 Visual control after hydraulic test

The visual examination is carried out after removal of all the temporary elements installed for the hydraulic test and after final cleaning of the part. The purpose of this examination is to verify the absence of damage caused by the hydraulic test and the cleanliness of the part.

The visual examination takes place in 3 steps:

- Step 1: Checking the completeness and dimensional conformity of the components
- Step 2: Checking the conformity of the weld seams and heat-affected zones
- Step 3: Checking the general surface condition of the components

Step 1: Checking the completeness and conformity of the equipment

The aim of this step is to check that all the final components of the equipment are assembled in accordance with the manufacturing drawings (dimensional control of what has been modified after hydraulic test). This control is carried out at the end of the manufacturing process. The customer and/or the notified body are invited according to the notification points present in the follow-up document.

Step 2: Checking the conformity of the weld beads and heat-affected zones

External weld seams and heat-affected areas are visually examined. This inspection is intended to check the absence of surface imperfections. It aims to verify that no defects (related to the constraints of the operations carried out from the hydraulic test such as impact or scratch) have been generated on the weld seams.

Step 3: Checking the general surface condition of the components

The examination is carried out as close as possible to the hydraulic test.

The objective of this control is to assess the external surface condition of the devices. The surface condition is considered satisfactory if there is no grease, dirt, or deformation of the walls of the equipment and accessories. No traces of shocks, impacts or scratches due to handling or other activities must be observed. For stainless steel surfaces, superficial and scattered rust stains are acceptable, provided that the total cumulative area of the stains remains less than 1 % of the total area.

Abnormal discoloration and migrating bodies are not acceptable for visual examination of surfaces.

If an important indication during the visual inspection at the end of the manufacturing process after the test is carried out (occurred during handling or other, from the visual inspection before the hydraulic test of the equipment), it is then treated according to the procedure for visual inspection of equipment, with the respect of the minimum thickness for the component.

The absence of migrating bodies has been verified in final by the ''F'' test during the emptying after hydraulic test according to the procedure cleaning.

Report of the final visual examination after the test

A visual inspection report is systematically drawn up for each visual inspection at the end of the manufacturing process after the hydraulic test.

This report traces the results of all 3 steps of controls described above. In case of deviation(s) found during the visual inspection, a new inspection will be performed after processing of the deviation(s).

5.10 Procedure of marking and traceability

The purpose of this part is to define the procedures for the identification and marking of materials and products for the manufacturing of the heat exchangers.

This procedure applies to all equipment at every stage of a process (reception, storage, preservation and uses).

5.10.1 Identification

The purpose of the identification is to establish at any time a relationship between materials, products or equipment and associated documents (and vice versa) in order to avoid confusion and in order to avoid the use of defective or inappropriate materials or products.

If the size of the item/part does not permit to create an additional marking with the entire identification, an appropriate coding system is put in place. The marking instructions do not apply to small-sized elements (e.g. screws, bolts…) and gaskets. For these cases, the identification of these elements is carried out on the packaging (bag, box) and contains all the information required by this document.

The quality of the marking is such that it can last at least one year when the products are stored under unheated room.

For the materials supplied according to a European Standard, the marking must comply with the requirements of the corresponding product standard.

5.10.1.1 Subcontracted fabrication

This specification is referenced in the purchasing specifications and its provisions apply to suppliers of materials and filler metals.

The existing normative provisions and rules of art in the field of identification also remain applicable.

5.10.1.2 Identification of procurement

The materials delivered or their packaging must show the manufacturer’s Purchase Order number without ambiguity.

In addition to the marking defined in the European standard of the corresponding product, it is requested to also mark the Unique Identification Number of the item/part defined in the order (U.I.N.) to which must be added a chrono number for quantities greater than 1.

The U.I.N. is specified by Fives Cryo in the Purchase Order.

Thus at least the following information is required:

- Name of the producer,

- Standard Number,
- Symbolic or numerical designation of steel,
- Cast number,
- Inspector's mark making reception,
- Rolling direction (if applicable)
- The item/part number + the number in the series (if applicable).

Example:

The following example is given as an indication for a tube identified NI1234.

XXXX // RCCM M3306 // Z6CND17-12 // YYYY // ZZZZ // NI1234-AAA

XXXX: corresponds to the manufacturer's name

RCCM M3306: corresponds to the reference supply standard

Z6CND17-12: corresponds to the material of the product

YYYY: corresponds to the casting number or code

ZZZZ: corresponds to the inspector's mark

NI1234: corresponds to the identification code of the tube.

AAA: corresponds to the number in the series (if applicable).

U.I.N. corresponds to NI1234 AAA.

5.10.1.3 Reception of procurement

A marking must facilitate the identification of the supplied items/parts that will form the equipment under pressure.

The parts and products delivered include a marking made by the supplier and containing all the information enabling them to be linked to the acceptance reports (grade, cast number, lot number, etc....).

The filler products are identified by their commercial designation.

The presence of the identification and its conformity to this specification is a mandatory stage of the control in reception.

In the event of incomplete or erroneous identification, a non-conformity (Supplier Deviation) Form will be issued and processing will be proposed. During this time, the material will be identified as blocked (or not allowed) at the General Store.

In order to facilitate the reading in the workshop, the conforming marking may be repeated/copied/highlighted by an appropriate means (felt, printer…) before material release.

5.10.1.4 During fabrication

On receipt of the parts given by the shop, the team leader or the workshop manager checks that the material corresponds to that provided for in the nomenclature of drawing.

The operator (machinist or other personnel designated by the team leader or workshop manager) may be required to carry out the new additional marking of U.I.N. This is carried out on the part before working, cutting and machining on the part.

Before and after the operation, the operator verifies that the new additional marking corresponds to the initial identification on the cut pieces and to the remained intended for reuse.

If the new additional marking cannot be carried out under good conditions (size, proximity to welds…), the presence of U.I.N. is not anymore mandatory provided that the marking has been indicated on the follow-up document or on an identification drawing.

The Chief Welder or team leader or workshop or site boss checks that the filler products supplied by the warehouseman or consumables management officer match those listed in the welding specification or filler metals list. Any filler product not identified is rejected.

The cut lines and tangency lines are marked with the felt or the point to be drawn. Needle strokes are reserved for markings with thicknesses greater than 6 mm.

5.10.1.5 Final identification / Regulatory marking

At the end of manufacture, the equipment must be identified / marked in accordance with the instructions given on the drawing.

A marking shall be affixed to each detachable part in order to permit the unambiguous identification of the elements concerned.

This marking shall contain at least the internal number of the equipment and, if possible, the item or marker number.

The regulatory marking of the equipment is carried out on the name plate. The plate and the information it contains are those given on the equipment drawing.

This plate is fixed firmly on the equipment and consists of a stainless-steel plate with a thickness of more than 1 mm.

5.10.1.6 Identification of measuring devices

All measuring, checking and testing devices shall be identified by a unique serial number affixed to the equipment or its box. If possible, the devices will also be provided with an adhesive label for the calibration and its validity period.

5.10.2 Spare parts marking

Marking and identification provisions apply fully to spare parts possible. These must therefore be identified sustainably and unambiguously.

The marking of spare parts must contain, in addition to the marking related to the manufacturing standard, the equipment reference, the reference of drawing and associated item number.

It must allow the Operator to easily link between the spare part and the delivered equipment.

5.10.3 Marking

To be correct, marking must not contaminate the material (for example: austenitic stainless steel), or cause notable strain-hardening, or notching.

It must be clearly readable and unambiguous (e.g. digits 6 and 9).

The marking operation is carried out in cold conditions.

5.10.3.1 Location

Unless otherwise specified on the detail drawing or in the order, the location of the marking shall be left to the choice of the supplier/manufacturer.

Generally, the markings must be located in the least stressed locations and outside the heat-affected areas of the welding operations.

Marking must not interfere with the interpretation of non-destructive controls. In addition, the markings must be affixed outside the functional surfaces (gasket).

5.10.3.2 Used means for marking

- MARKING WITH INK OR PAINT

Markings with ink or paint are used on materials with no thickness limit (metal marker pen, felt-tip, etc.). They must be free of halogenated polluting products (stainless steel) and PMUC (products and materials for use in power plants) for equipment designed for nuclear or thermal power plants. They can be used for provisional marking and for permanent marking.

- MARKING WITH VIBRATING PENCIL

Marking takes place with a vibrating pencil with a carbide tip, usually on materials not more than 6 mm thick. (Marking by stamping is preferred for materials thicker than 6 mm). A set of tips is reserved exclusively for use on austenitic stainless steel. By their construction, the devices used are not likely to penetrate more than 0.25 mm into the material.

- MARKING BY STAMPING

Round or ball stamps are used. This process is prohibited for thicknesses not exceeding 6 mm (steel) or 12 mm (for hardening and tempered material). The stamp can be used on stainless or carbon steel if it is not loaded. The stamp must be cleaned before each use. This type of marking can be used: for permanent marking on components and for marking off-cuts sent back to the stores.

- ADHESIVE STRIP MARKING

This method consists of writing on the strip (PMUC) in felt-tip then sticking it onto the component.

The surface on which the strip is affixed is cleaned and degreased beforehand. After removing the adhesive, special care will be taken to remove any traces of adhesive.

This method can be used for provisional marking.

5.10.3.3 Dimensions of character

For pipes and pressure vessels with diameters ≤ 350 mm, the recommended height of the characters is 4 to 6 mm.

For pipes and pressure vessels with diameters > 350 mm, the recommended height of the characters is 8 to 12 mm.

For very small parts, the size of the characters will be as big as possible to remain compatible with the part dimensions.

5.10.4 Welds identification

To establish an unequivocal relationship between a weld and its associated documents, it is required for x-ray welds of the pressure vessel, each to be marked as required by the applicable radiographic inspection procedure.

Each weld forming a pressure vessel shall be identified by an identification number assigned according to the manufacturing drawing. This number must be cold marked in the vicinity of the welded joint and outside the 15 mm zone for the interpretation of non-destructive tests.

Before marking, the area must be cleaned. Weld identification markings are made at the time of approach. When required, the reference point shall be marked either at this stage or at the time of radiographic inspection.

5.10.4.1 Butt welds

For X-ray welds with diameter greater than or equal to DN80, in addition to the marker of the welding, a reference point called "zero radio" shall be engraved. It can be a materialized choice:

- by a zero and an arrow parallel to the weld «0 →»,
- by the intersection of two arrows, one parallel to the weld and the other perpendicul« ↳ »

The arrow parallel to the weld is positioned 25 mm +/-3 mm from the edge of the joint.

If the assembly includes a tube and a fitting (elbow, tee, etc.), the marking is preferably carried out on the tube.

The arrow parallel to the weld is clockwise when placed between the person reading it and the weld.

The perpendicular arrow is oriented towards the weld.

The weld identification marking is positioned near the reference point and outside the 25 mm area of the weld.

For assembly tube / elbow, the weld mark and reference point are positioned on the line in extrados side.

5.10.4.2 Longitudinal welds

Point 0 is positioned 25 mm from the edge of the plate and the edge of the weld.

The identification marking of the weld is positioned next to the 0 and outside the 25 mm area by relation to the weld.

For the weld nodes, point 0 is positioned at 25 mm:

- of the edge of the circular weld and
- the edge of the longitudinal weld.

5.10.4.3 Levelled welds

When the welds are levelled, before welding, mark the parting line by engraving symmetrical marks relative to this line, set at 4 places, at 90° angles, for circular welding, or at the two ends for a longitudinal weld. These marks are placed at least 100 mm from the edge of the seam.

In some cases, it is only possible to place these "V" on one side of the weld (e.g.: close to a flange).

If the assembly includes a tube and an accessory (elbow, tee, etc.), the marking is done on the tube.

The arrow is clockwise.

The marking of the identification of the weld is positioned next to the 0 and outside the 100 mm area relative to the edge of the weld.

Before performing the levelling operation, the operator creates a layer with the positions of the welded edges in relation to the "V", point 0 and the arrow. The layer is attached to the follow-up document and will be used for X-ray control.

5.10.4.4 Repairs, cuts and reworks

In the event of repair, cutting and reworking, the initial marker on the weld is completed with a letter in accordance with the table below. This complete identification is noted on the appropriate monitoring document as well as on the inspection documents and X-ray films. In any case, the equipment and drawings only mention the initial identification.

Table 26: Weld repair identification

OPERATION ON WELD:	INITIAL IDENTIFICATION FOLLOWED BY:	EXAMPLE (IDENTIFICATION INITIAL=A16)
1st Repair	R1	A16R1
2nd repair	R2	A16R2
x repair	Rx	A16Rx
Cutting following non-compliant X-ray inspection	N	A16N
Cutting following a manufacturing fault (and same material)	Z	A16Z
Rework for dimensional correction	Y	A16Y

There may be a combination of these various identifications. EXAMPLE: A16R1Y means a weld "reworked" after repair and correction.

A weld which has been cut and redone after allocating new materials must have a new number. This new identification is noted on the drawing and the equipment, as well as on quality drawings, inspection documents and X-ray films.

5.10.4.5 Correction of permanent marking

The erroneous marking is crossed out with "xxx". The correct marking is inserted close to the previous one.

5.10.5 Loss of traceability

In case of loss of traceability between the documentation and the material, the processing of the deviation is carried out by non-conformity record.

During processing, the material may be quarantined or physically identified as being subject to deviation treatment until resolution.

5.10.6 Documentation

Marking added during manufacture is checked by the team leader or workshop manager. The final marking is checked by an inspector (or the workshop or site manager for D.R.). The checker certifies its conformity with the documents, on the Report or Quality follow-up document, giving his name, date and signature in the boxes provided for the purpose.

6 Turbomachinery qualification methodology

6.1 Object

6.1.1 Context and issues

As part of a European project on Innovative sCO2-Based Heat Removal Technology for an Increased Level of Safety of Nuclear Power Plants. A study is needed to identify of applicable Technical Regulations and Standards (follow also TRS Study) in the Conventional and Nuclear fields.

Baker Hughes Nuovo Pignone (BH NP) in the development of Project sCO2-4-NPP wishes to have a regulatory study. The TRS study will be focused on flange to flange and related auxiliaries (mechanical integrity, VFD, Valves, control, electronics) in scope of BH NP.

In this context, the company Baker Hughes Nuovo Pignone entrusted to Bureau Veritas**Error! Reference source not found.** the realization of a mission of study of conformity to the regulations for the Project sCO2-4-NPP according to the terms of the specification of reference subcontracting.

The stages of the different phases are presented below:

- Step 1: Kick-off conf-call
- Step 2: Regulatory reference
    - Regulatory reference study

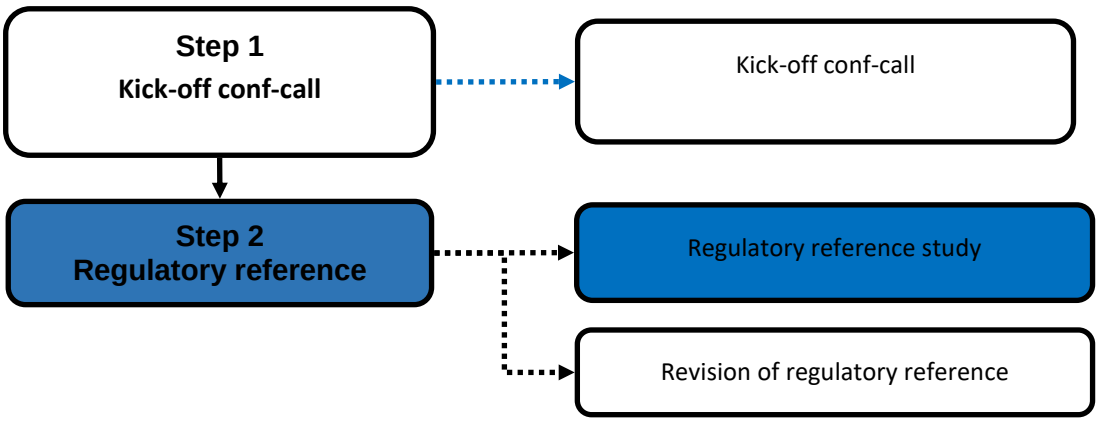

Figure 23: Stages of the different phases of the regulatory study

This report is one of the deliverables from step 2 of order following the offer from Bureau Veritas Italia S.p.A.

This report constitutes the regulatory reference of Project sCO2-4-NPP.

6.1.2 Scope of the study

The study relates to the supply of Project sCO2-4-NPP as defined in the reference document [22].

The intended use of this equipment is for Nuclear Power Plant.

Are taken into account, the texts applicable on May 01, 2022, which is the date of development of this regulatory reference. However, the standard will indicate the relevant regulations which are applicable or in the process of transposition after this date.

At this stage the report intends to cover applicable regulatory frameworks in **France** and **Czech Republic**, including:

General European regulations:

- Applicable European directives for CE marking (version in current on May 01, 2022);

- European directives applicable to the user in the employer sense for the requirements to be taken into account by the manufacturer (version in current on May 01, 2022);

- Applicable European directives relating to the environment (version in current on May 01, 2022);

- Mandatory application European norms (version in current on May 01, 2022).

French specific regulations:

- French Labour code (version in current on May 01, 2022);

- French environmental code (version in current on May 01, 2022);

- National specific Nuclear Regulation;

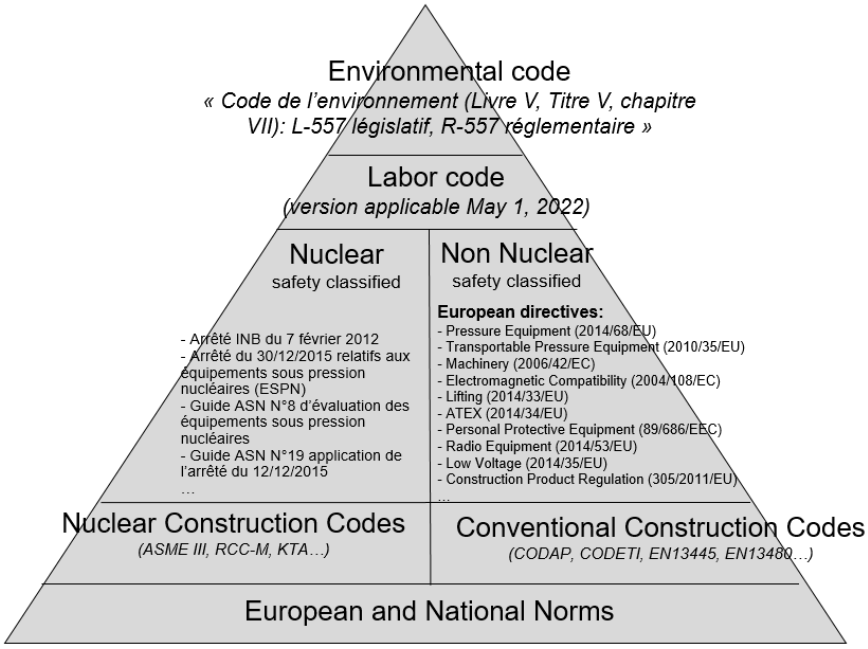

Figure 24: French specific regulations pyramid

Czech specific regulations:

- National Labour and environmental codes

- National specific Nuclear Regulation

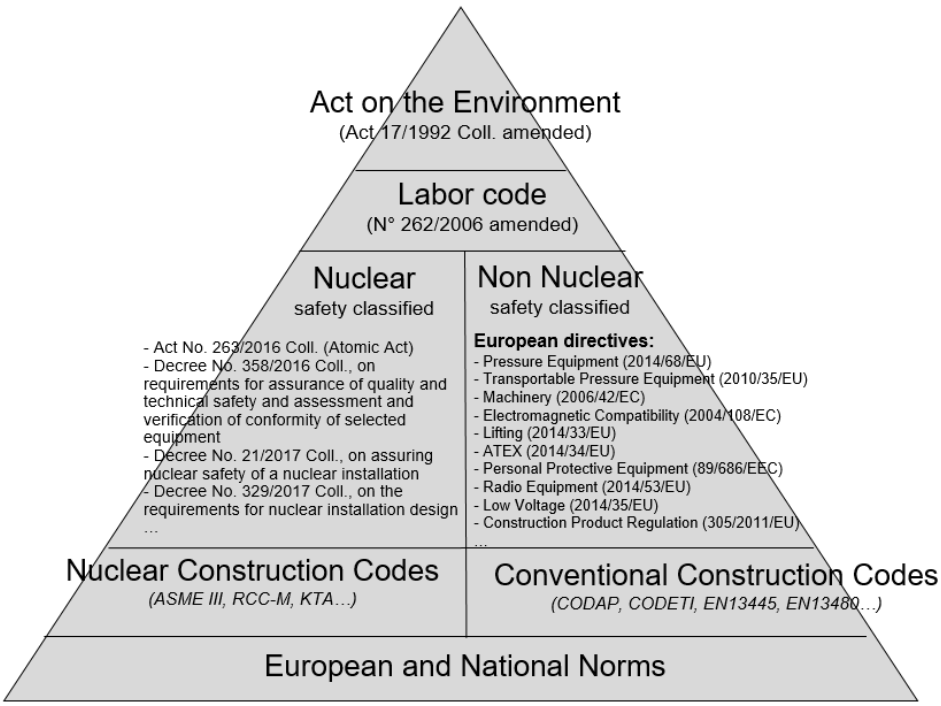

Figure 25: Czech specific regulations pyramid

The following regulations are excluded from the scope:

- Pyrotechnic regulations;

- Transport of dangerous goods;

- Regulations processed under the Reception of Military Vehicles (RVM) and highway code;

- Information systems security (SSI).

The following life phases (if existing) are taken into account:

- Storage;

- Preparation;

- Use;

- Maintenance;

- Withdrawal of service.

6.2 Structure of the report

6.2.1 Introduction

According to the offer, the objectives of this report are not:

- The conformity assessment of the Project sCO2-4-NPP.

Furthermore, the entry documents are limited to those supplied by BH NP.

6.2.2 Structure

In order to finalize the civil and nuclear regulatory reference applicable to the Project sCO2-4-NPP, the following steps must be followed:

- Methodology (see chapter 6.3):
  This chapter presents the approach followed when setting up the regulatory framework.
- Determination of the subsets (Cf. chapter 6.4):
  This chapter proposes a division into subsets of the Project sCO2-4-NPP shell in order on the one hand to facilitate the identification of the applicable regulations and, on the other hand, to allow the identification of the requirements applicable to the subsets.
- Identification of applicable texts (see chapter 6.5):
  The identification of the applicable texts is based on the division into subsets of the Project sCO2-4-NPP and on the methodology used for the study.
- Structure of the regulatory reference (See chapter 6.7):
  This chapter explains the structure used for the regulatory reference.
- Regulatory reference (See chapter 6.8):
  This chapter refers to Appendix I, where the regulatory framework is presented

6.3 Methodology

6.3.1 Introduction

The objective of this chapter is to present the methodology used to define the regulatory reference applicable to the Project sCO2-4-NPP.

The constitution of the civil and nuclear regulatory reference applicable to the equipment constituting the Project sCO2-4-NPP took place according to the following stages:

- Analysis of the documents provided (Cf. [23] to [25]) to determine the characteristics of the components constituting the Project sCO2-4-NPP from a regulatory point of view (highlighting sub-assemblies);
- Comparison of the applicable regulations;
- Identification of the means making it possible to justify compliance for each of the applicable requirements.

6.3.2 Method

The identification of the applicable texts is based on:

- Analysis of the documents sent by BH-NP (Cf. [23] to [25]).

This allows us to determine:

- Subsets that may have an impact on human safety or the environment;
- The expected functions.

For each text, this breakdown makes it possible to specify:

- The subsets for which the text is applicable;
- The type of justification or proof of conformity expected;
- The foreseeable gaps and deficiencies taking into account:

- Nuclear specifications for the Project sCO2-4-NPP.

6.4 Determination of subsets

6.4.1 Introduction

The objective of this chapter is to propose a breakdown into sub-assemblies of the components of the Project sCO2-4-NPP in order to facilitate the determination of:

- The applicable regulations;
- The requirements of this regulation applicable to each of the sub-assemblies.

In order to facilitate the creation of the regulatory reference, it is proposed to:

- Define sub-assemblies of the equipment constituting the Project sCO2-4-NPP so that they allow an easy understanding of the requirements of the applicable texts which relate to it.
- Classify the materials described in chapter 6 in these different subsets.

6.4.2 Choice of sub-assemblies

6.4.2.1 Approach

The equipment or components of the Project sCO2-4-NPP are broken down into sub-assemblies so as to appropriately target the requirements of the texts which apply to them.

6.4.2.2 Determination

The approach that led to the determination of the subsets (SE) is summarized by the tree structure presented below:

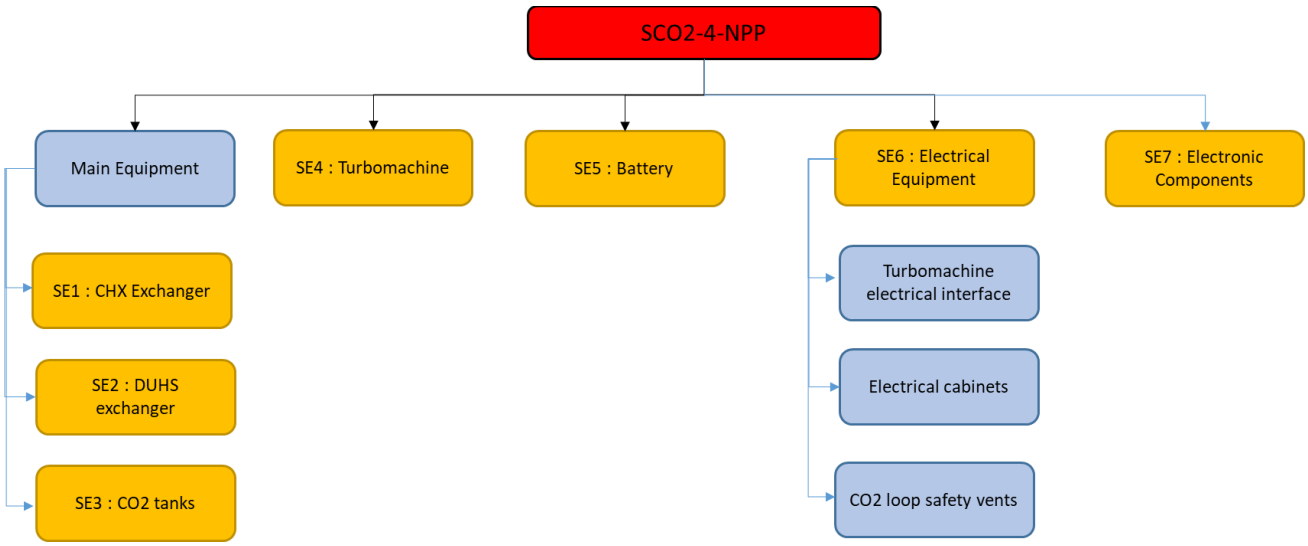

Figure 26: Tree structure of the determination of subsets approach

The subsets selected for the study are therefore:

1. **<u>Pressure parts</u>**
   SE1: CHX Exchanger

This subset includes the Steam/CO2 exchanger.

SE2: DUHS exchanger

This subset includes the CO2/Air exchangers.

SE3: CO2 tanks

This subset includes the 63 m^3 CO2 tanks.

2. **Generator**

   SE4: Turbomachine

   This subset includes expander-compressor high speed generator.

3. **Electrical**

   SE5: Power supply (including Battery)

   This subset includes power supplies, electrical circuits (wiring, fuse or breaker, ...) and electrical box.

   SE6: Electrical Equipment (including Actuators)

   This subset includes electric motor for open the breechblock and electric motor and worm for the recoiling mass

   SE7: Electronic Components (including Remote control)

   This subset includes remote control unit for controlling firing Device, Firing Veto and electric motors.

6.5 Identification of applicable texts

The objective of this chapter is to present the texts applicable to the subsets identified in the chapter 6.4:

- Articles of the French Labor Code;
- Specific French regulations;
- Articles of the French Environment Code;
- European directives / regulations requesting CE marking;
- European User Directives, in the employer sense;
- European directives / regulations on the environment;
- European regulations applicable to the environment and chemical substances;
- Radio Regulations of the International Telecommunication Union (ITU);
- Mandatory application norms;
- Nuclear Regulation.

See Appendix H for the detailed identification of applicable texts.

This identification is carried out without taking into account any exclusions for equipment designed and intended specifically for the Armed Forces.

An analysis of the links between the applicable texts (directives / regulations and codes) makes it possible to summarize the common requirements and makes the regulatory framework more readable (see Appendix I).

The labor code and the environment code transpose into French law several European directives and regulations, in particular the European directives known as user in the employer sense and the European directives related to the environment. Thus, a number of requirements of these codes are identical to the requirements of these directives.

It therefore seems advisable to simplify the regulatory framework, as well as for stage 2 by identifying these common points in order to keep only one of the two texts for the analysis of conformity.

In case of conformity of articles of a code and a directive, only the requirements of the directive are kept in the repository and the conformity assessment will be made vis-à-vis these. However, the traceability between these different texts is ensured by the matrix presented in Appendix H.

6.5.1 Conclusion on Conventional Regulation

The table below summarizes the applicable texts of the regulatory reference frame, respecting the color code for the paragraph directives:

Table 27: Final table of the applicable texts of the regulatory reference frame

French Labor Code, Regulatory part Part IV, Book II, Title III, Chapter I: "Handling of charges" (Article R4541-9)
French Labor Code, Regulatory Part, Part IV, Book II, Title II, Chapter II: "Ventilation, sanitation" (Articles R4222-1 to R4222-26), Section 1 "Lighting" (Articles R4223-1 to R4223-12), Section 2 “Thermal environment” (Articles R4223-13 to R4223-15)
Directive 2009/104/EC on minimum safety and health requirements for the use by workers at work of work equipment
Directive 90/269/EEC on minimum safety and health requirements for the use by workers at work of work equipment
Directive 92/58/EEC on the minimum requirements for the provision of safety and/or health signs at work
Directive 98/24/EC on the protection of the health and safety of workers from the risks related to chemical agents at work
Directive 2002/44/EC on the minimum health and safety requirements regarding the exposure of workers to the risks arising from physical agents (vibrations)
Directive 2003/10/EC on the minimum health and safety requirements regarding the exposure of workers to the risks arising from physical agents (noise)
Directive 2004/37/EC on the protection of workers from the risks related to exposure to carcinogens or mutagens at work
Directive 2013/35/EC on the minimum health and safety requirements regarding the exposure of workers to the risks arising from physical agents (electromagnetic fields)
Directive 90/270/EC on the minimum safety and health requirements for work with display screen equipment
Pressure Equipment Directive (PED) 2014/68/UE
Low voltage directive 2014/35/UE
Machinery directive 2006/42/EC
Electromagnetic Compatibility (EMC) Directive 2014/30/UE
Directive 2006/66/CE on batteries and accumulators and waste batteries and accumulators
Directive 2011/65/EU on the restriction of the use of certain hazardous substances in electrical and electronic equipment (ROHS)
Directive 2012/19/EU on waste electrical and electronic equipment (WEEE)
Directive 2008/98/EC on waste

Regulation 1907/2006 concerning the Registration, Evaluation, Authorisation and Restriction of Chemicals (REACH)
Regulation 2019/1021 on persistent organic pollutants (POP)

6.5.2 Nuclear Regulation (France)

Nuclear activities in France are defined by article L.1333-1 of the public health code. They are subject to specific provisions aimed at protecting people and the environment and apply either to all of these activities or to certain categories. The legislative and regulatory corpus is described below.

The legal framework specific to radiation protection finds its source in the norms, standards or recommendations established by various international bodies. May be mentioned, in particular:

- The International Commission on Radiological Protection (ICRP)
- The International Atomic Energy Agency (IAEA)
- The International Standard Organisation (ISO)

The legal framework for nuclear activities in France, which had undergone major overhauls since 2000, was updated with the transposition of Directive 2013/59/Euratom of December 5, 2013. The transposition of this directive is mainly ensured in France by Ordinance No. 2016-128 of February 10, 2016 laying down various nuclear provisions provided for in Article 128 of Law No. 2015-992 of August 17, 2015 on energy transition for green growth (Loi TECV) and by decrees n°2018-434 of June 4, 2018 containing various provisions in nuclear matters and n°2018-437 of June 4, 2018 relating to the protection of workers against the risks due to ionizing radiation.

At the legislative level, the ordinance of February 10, 2016 allowed in particular a new drafting of the legislative provisions of chapter III of title III of book III of the first part of the public health code relating to ionizing radiation (articles L. 1333- 1 and following), while retaining most of the existing principles and requirements. At the regulatory level, the decrees of June 4, 2018 modify:

- The labor code
- The public health code
- The environment code
- The defense code
- The public security code.

The table attached in Appendix K presents the major applicable regulations.

6.5.3 Nuclear Regulation (Czech Republic)

Nuclear activities in Czech Republic are regulated by Czech Nuclear Safety Authority (SUJB).

Most of the Czech official regulatory documents are available in Czech language only. Some translations of the regulations are available but shall be considered only as working documents, intended for information purposes only.

System of the new nuclear law of the Czech Republic has entered into force on 1st January 2017.

The table attached in Appendix L presents the major applicable decrees.

6.5.3.1 List of codes and standards used for design and manufacture

The codes and standards used for the design of the equipment are as follows:

- RCC-M edition 2018 (RCC-M 2), with application of calculation note for the heat exchanger,
- European standards (for the supply of materials).

6.6 Structure of the reference

6.6.1 Introduction

The objective of this chapter is to present the structure of the regulatory reference.

The regulatory reference created is based on:

- The requirements of the French Labor Code;
- The requirements of the French Environment Code;
- The requirements of applicable European directives / regulations relating to CE marking and user obligations in the sense of employers;
- The requirements of applicable European directives / regulations relating to the environment;
- Mandatory application norms.

6.6.2 Types of text

This regulatory reference includes the following types of texts:

- Articles of the French Labor Code;
- Articles of the French Environmental Code;
- European directives / regulations requesting CE marking;
- European User Directives (specific directives under Directive 89/391/EEC concerning the implementation of measures to promote improvements in the safety and health of workers at work);
- European directives / regulations concerning the environment;
- Mandatory application norms.

6.6.3 Presentation of regulation documents

The texts are classified according to thematic tabs covering the entire regulatory and normative field for the safety of people and the environment (for example):

- Personal safety[1];
- Machinery and lifting;
- Electrical and ATEX installation;
- Pressure equipment;
- Dangerous or prohibited materials;
- Emissions;
- Waste.

The regulation document is presented in tab structure as follows:

[1] Includes in particular the articles of the Labor Code, user guidelines and mandatory standards.

Line	N°	Type of text	Date	Publication date OJ	Title	Requirements	SUB01 : CHX Exchanger	SUB2 : DUHS exchanger	SUB3 : CO2 tanks	SUB4 : Turbomachine	SUB5 : Battery	SUB6 : Electrical Equipment	SUB7 : Electronic Components	Type of justification expected	Comments
(1)	(2)	(3)	(4)	(5)	(6)	(7)	(8)							(9)	(10)

Figure 27: Structure of the regulation document

(1) Corresponds to the line of the table;

(2) Corresponds to the text reference number;

(3) Corresponds to the type of text (European Directive, Labor Code, Environmental Code, standards, etc.);

(4) Corresponds to the date of writing the text;

(5) Corresponds to the date of publication of the text in the official journal “OJ” (OJ n ° L… p…);

(6) Corresponds to the title of the text;

(7) Corresponds to the details of the text requirement;

(8) Corresponds to the decomposition into sub-assemblies of the Project sCO2-4-NPP as presented in chapter 6.4;

(9) Corresponds to the type of expected justification that the manufacturer must provide for the applicable text requirements (A: Documentary analysis, C: Declaration or certificate of conformity, E: Tests (including PV or test certificate), I: Visual inspection, M: Measurements);

(10) Corresponds to any comments according to the requirement and the sub-set considered.

6.7 Regulatory references

See Appendix J.

7 Conclusion

This deliverable presents a detailed overall qualification strategy for the sCO2-4-NPP cycle's components (heat exchangers and turbomachinery).

For the heat exchangers part, procedures were specifically constructed and detailed in this document for all key points from the manufacturing until the installation of this equipment on-site. The procedures take into account the following: risk analysis, list of important activities for the protection of interest, list of AIP and associated technical controls, necessary dimensions to meet the essential safety requirements, materials specifications, inspection and quality control, cleaning procedure, final visual examination at the end of manufacturing and procedure of marking and traceability.

For brazing, since this assembly technique is still not fully approved for nuclear applications, a detailed qualification proposition suggesting adapted solutions to the major technological gaps was established in this deliverable, based on the existing regulations and on several efforts on qualification strategies for compact heat exchangers in the literature.

Nowadays, it is common knowledge that compact heat exchangers will largely be used in advanced reactors. The major fields of interest are the degradation mechanisms that the components might be subjected to along with understanding what the plant and the system structure components reliability targets are.

We are fully confident that this document will constitute a strong foundation for a near future insertion of the sCO2-4-NPP system in nuclear power plants.

For the turbomachinery part, the main regulatory implications and relevant requirements have been identified. These results establish a solid base on which a detailed analysis will be performed once the detailed design is available.

As emerged during the project execution, the qualification plan for the equipment shall be specific for each installation site and be performed by the OEM together with the end user and a relevant notified body.

8 References

[1] Directive 2014/68/EU of the European Parliament and of the Council of 15 May 2014 on the harmonisation of the laws of the Member States relating to the making available on the market of pressure equipment

[2] Order 30/12/15 related to nuclear pressure equipment and certain safety accessories intended for their protection.

[3] Decree 2015-799 of 01/07/2015 related to products and equipment at risk

[4] Order 07/02/2012 fixing the general rules related to basic nuclear installations (BNI)

[5] Design and construction rules for mechanical components of PWR nuclear islands RCC-M AFCEN Edition 2018.

[6] NF EN ISO 9001: 11/2008 (ISO 9001: 2008) Systems of quality management - Requirements

[7] NF EN 10204: Metallic products, Type of control documents

[8] NF EN 13018 Visual examination - General principles

[9] NF EN ISO 6520 Classification of defects in metal fusion welding

[10] NF EN ISO 9712 Qualification of controllers - General principles

[11] NF EN 16810 UT examination - General principles

[12] NF EN 14127 Thickness measure by UT

[13] NF EN ISO 3452-1 Liquid penetrant test - General principles

[14] NF EN ISO 3452-2 Examination by liquid penetrant test – Penetrant testing products

[15] EN ISO 11699 -1 Classification of industrial films

[16] EN ISO 19232 -1 Wire Image Quality Indicator (IQI)

[17] EN ISO 19232 -2 Image Quality Indicator (IQI) with Hole and Steps

[18] EN 25580 Industrial radiographic illuminators

[19] ASME BPVC Section III-Rules for Construction of Nuclear Facility Components-Division 5-High Temperature Reactors

[20] Report to the DOE: 1630-0001-RPT-001, Revision 0, ASME Code Case for Compact Heat Exchanger Draft Code Case and Gap Analysis

[21] ICONE27-1138 Potential ASME Code Case for Construction of Compact Heat Exchangers in High Temperature Reactors

[22] 2022 03 25 - Extract call BHNP and documents received by email.

[23] sCO2-4-NPP_D5.1_Design-concept-with-auxiliary-systems, Rev 1.0 of 29/10/2021

[24] sCO2-4-NPP_D3.3_Design bases and safety analyses for system and components, Rev 1.0 of 22/12/2020

[25] Technical document of Project sCO2-4-NPP reference SNT457616086- Rev 01 of 12/10/18

[26] Radioprotection Guide RM 13-067B

[27] Deliverable 5.1 sCO2-4-NPP, Design concept with auxiliary systems

[28] Deliverable 3.2 sCO2-4-NPP, Requirements for reference plant modifications for installation of sCO2-4-NPP

[29] European Commission, Directorate-General for Energy, Project Analysis to support the implementation in practice of Articles 8a-8c of Directive 2014/87/Euratom: final report, Publications Office of the European Union, 2021, *https://data.europa.eu/doi/10.2833/172815 [data.europa.eu]*

Appendix A Risk analysis tables for PP

A.1 Section 1: design analysis

Table 28: Ductile rupture (excessive Deformation, plastic Instability, bursting…)

S1: Dimensions / Model; S2: Material properties; S3: Surface appearance; S4: Situations and loads							
Part(s)	**Cause of failure / risk**		**Reduction of risks**	**Solution according to RCC-M level 2**	**Documentary proof**	**Residual risks**	
	Level 1	**Level 2**				**Yes/No**	**Requirement for operator**
All	S1	Use of an inadequate dimensioning method	Dimensioning according to a proven code (RCC-M)	RCC-M C3000 + good practices and expertise of manufacturer	Calculation note	No	Not applicable
	S1	Use of a software outside its validation domain	Use of a calculation code adapted to the application.	Not considered by RCC-M, Qualified software	Calculation note + qualification software note	No	Not applicable
	S2	Error on the allowable stresses in the base material	The allowable stresses considered comply with the safety coefficients	RCC-M Appendix ZI compliant with PED and Nuclear PMA + ZZ300	Calculation note. Nuclear PMA	No	Not applicable
	S2	Error on allowable stresses in the welded joint	Choice of an assembly with characteristics at least equal to those of the base material or consideration of lower specific characteristics	RCC-M C3178.2	Calculation note	No	Not applicable
	S4	Error on joint coefficient	Consideration of the characteristics of the welded joint	Welding coefficient of 1 according to RCC-M C3178.1 RCC-M ZZ300 EES	Calculation note	No	Not applicable

				2.2.3b			
	S1	Important dimensions (DNRE) are not included in the manufacturing documentation.	Identification on the equipment drawings of the dimensions and tolerances necessary to prevent excessive deformation.	RCC-M ZY310 EES 3.1	Identification of important dimensions DNRE on drawings and in document [x]	No	Not applicable
Part(s)	Cause of failure / risk		Reduction of risks	Solution according to RCC-M level 2	Documentary proof	Residual risks	
	Level 1	Level 2				Yes/No	Requirement for operator
Id	S2	Inappropriate choice of base material	Choice of suitable material grade (Re, Rm, allowable stresses)	RCC-M C2000 RCC-M ZY310 EES 4.2	Nuclear PMA and procurement specifications	No	Not applicable
		Inappropriate choice of filler materials	Choice of a filler material with characteristics at least equal to those of the base material or consideration of lower specific characteristics	RCC-M S2120 RCC-M C3178.2	Filler material supply documentation for welding and brazing	No	Not applicable
	S3	Not applicable				No	Not applicable
Id	S4	Inappropriate definition of the study conditions considering the situations and loads identified by the operator.	Analysis taking into account all situations and loads (normal and SHI) considering the relevant life phases (operation, clamping force, hydraulic test, handling, transport, assembly)	RCC-M C3130 Calculation according to C3132 (pressure in only one side)	Note defining the study conditions or Calculation note	No	Not applicable
Id	S1	Loss of thickness due to generalized corrosion	The design takes into account a potential loss of thickness due to corrosion during operation	Over-thickness is taken into account in accordance with C3171.	Calculation note	No	Not applicable

Table 29: Elastic or elasto-plastic instability (buckling)

S1: Dimensions / Model; S2: Material properties; S3: Surface appearance; S4: Situations and loads							
Part(s)	**Cause of failure / risk**		**Reduction of risks**	**Solution according to RCC-M level 2**	**Documentary proof**	**Residual risks**	
	Level 1	**Level 2**				**Yes/No**	**Requirement for operator**
All	S1	Use of an inadequate dimensioning method	Dimensioning according to a proven code (RCC-M)	RCC-M C3000 + good practices and expertise of manufacturer	Calculation note	No	Not applicable
	S1	Use of a software outside its validation domain	Use of a calculation code adapted to the application.	Not considered by RCC-M, Qualified software	Calculation note + qualification software note	No	Not applicable
	S2	Error on the allowable stresses in the base material	The allowable stresses considered comply with the safety coefficients	RCC-M Appendix ZI compliant with PED and Nuclear PMA + ZZ300	Calculation note. Nuclear PMA	No	Not applicable
	S2	Error on allowable stresses in the welded joint	Choice of an assembly with characteristics at least equal to those of the base material or consideration of lower specific characteristics	RCC-M C3178.2	Calculation note	No	Not applicable
	S4	Error on joint coefficient	Consideration of the characteristics of the welded joint	Welding coefficient of 1 according to RCC-M C3178.1 RCC-M ZZ300 EES 2.2.3b	Calculation note	No	Not applicable
	S1	Important dimensions (DNRE) are not included in the manufacturing documentation.	Identification on the equipment drawings of the dimensions and tolerances necessary to prevent excessive deformation.	RCC-M ZY310 EES 3.1	Identification of important dimensions DNRE on drawings and in document [x]	No	Not applicable

Id	S2	Inappropriate choice of base material	Choice of suitable material grade (Re, Rm, permissible stresses)	RCC-M C2000 RCC-M ZY310 EES 4.2	Nuclear PMA and procurement specifications	No	Not applicable
		Inappropriate choice of filler materials	Choice of a filler material with characteristics at least equal to those of the base material or consideration of lower specific characteristics	RCC-M S2120 RCC-M C3178.2	Filler material supply documentation for welding and brazing	No	Not applicable
	S3	Not applicable				No	Not applicable
Id	S4	Inappropriate definition of the study conditions considering the situations and loads identified by the operator.	Analysis taking into account all situations and loads (normal and SHI) considering the relevant life phases (operation, clamping force, hydraulic test, handling, transport, assembly)	RCC-M C3130 Calculation according to C3132 (pressure in only one side)	Note defining the study conditions or Calculation note	No	Not applicable

Table 30: Stress corrosion cracking

S1: Dimensions / Model; S2: Material properties; S3: Surface appearance; S4: Situations and loads							
Part(s)	**Cause of failure / risk**		**Reduction of risks**	**Solution according to RCC-M level 2**	**Documentary proof**	**Residual risks**	
	Level 1	**Level 2**				**Yes/No**	**Requirement for operator**
	S1	Not applicable				No	Not applicable
All	S2	Choice of inappropriate material for stress corrosion cracking for the considered environment	Choice of a grade that does not present an unfavourable feedback about stress corrosion (considering the forming conditions, for example).	**- RCC-M C2000** **-RCC-M ZY310 EES 4.2**	Nuclear PMA and procurement specifications	No	Not applicable

		Inappropriate material for the transformation methods	Reducing of residual stresses with heat treatment for brazing, Verification of materials properties (mechanical and chemical) with a simulation of heat treatment equivalent to brazing operation on fins, separates plates and bars	-RCC-M M110 -RCC-M C4340 -RCC-M C4380 -RCC-M ZZ300 EES 3.1.2	Supply documentation, Forming procedure, Heat treatment furnace procedure	No	Not applicable
		Choice of inappropriate filler material for stress corrosion for the considered environment	Choice of a filler material of the same grade as the base material (or recognized safe with the base material)	RCC-M S2000	Filler material supply documentation	No	Not applicable
Id	S3	Final surface finish inappropriate for stress corrosion risk	State of cleanliness allowing to preserve the passivation layer: - cleanliness, - conservation of cleanliness (use of non-harmful products and materials, no ferritic pollution ...), - cleanliness criteria.	RCC-M C4360	Cleanliness and cleanliness control procedures	No	Not applicable
Id	S4	Wrong definition of the study conditions considering the situations and loads (including the chemistry and temperature of the environment...) identified by the operator.	Determination of situations and loads, considering the relevant life phases (operation, hydraulic test, assembly, etc.).	Not covered by RCC-M	Note on the study conditions	No	Not applicable
		Not considering the operator's experience feedback	Consideration of operator feedback in the design of the equipment	RCC-M ZY310 EES 1.2	Validation of design choices by the operator	No	Not applicable

Table 31: Pitting corrosion

S1: Dimensions / Model; S2: Material properties; S3: Surface appearance; S4: Situations and loads							
Part(s)	**Cause of failure / risk**		**Reduction of risks**	**Solution according to RCC-M level 2**	**Documentary proof**	**Residual risks**	
	Level 1	**Level 2**				**Yes/No**	**Requirement for operator**
	S1	Not applicable				No	Not applicable
All	S2	Choice of inappropriate material for environment	Choice of a grade that is not sensitive to pitting corrosion	RCC-M C2000 RCC-M ZY310 EES 4.2	Nuclear PMA and procurement specifications	No	Not applicable
		Choice of inappropriate filler material for environment	Choice of a filler material of the same grade as the base material (or recognized safe with the base material)	RCC-M S2000	Filler material supply documentation	No	Not applicable
Id	S3	Final surface finish inappropriate for pitting corrosion risk	State of cleanliness allowing to preserve the passivation layer: - cleanliness, - conservation of cleanliness (use of non-harmful products and materials, no ferritic pollution ...), - cleanliness criteria.	RCC-M C4360	Cleanliness and cleanliness control procedure	No	Not applicable
Id	S4	Wrong definition of the study conditions considering the situations and loads (including the chemistry and temperature of the environment...) identified by the operator.	Determination of situations and loads, considering the relevant life phases (operation, hydraulic test, assembly, etc.).	Not covered by RCC-M	Note on the study conditions	No	Not applicable
		Not considering the operator's experience feedback	Consideration of operator feedback in the design of the equipment	RCC-M ZY310 EES 1.2	Validation of design choices by the operator	No	Not applicable

Table 32: Cavernous corrosion

S1: Dimensions / Model; S2: Material properties; S3: Surface appearance; S4: Situations and loads							
Part(s)	**Cause of failure / risk**		**Reduction of risks**	**Solution according to RCC-M level 2**	**Documentary proof**	**Residual risks**	
	Level 1	**Level 2**				**Yes/No**	**Requirement for operator**
	S1	Not applicable				No	Not applicable
All	S2	Choice of inappropriate material for environment	Choice of a grade that is not sensitive to cavernous corrosion	RCC-M C2000 RCC-M ZY310 EES 4.2	Nuclear PMA and procurement specifications	No	Not applicable
		Choice of inappropriate filler material for environment	Choice of a filler material of the same grade as the base material (or recognized safe with the base material)	RCC-M S2000	Filler material supply documentation	No	Not applicable
	S3	Not applicable				No	Not applicable
Id	S4	Wrong consideration of operating constraints	Design limiting confined and retention zones during shutdown	RCC-M C3175	Drawing	No	Not applicable
		Wrong definition of the study conditions considering the situations and loads (including the chemistry and temperature of the environment...) identified by the operator.	Determination of situations and loads, considering the relevant life phases (operation, hydraulic test, assembly, etc.).	Not covered by RCC-M	Note on the study conditions	No	Not applicable
		Not considering the operator's experience feedback	Consideration of operator feedback in the design of the equipment	RCC-M ZY310 EES 1.2	Validation of design choices by the operator	No	Not applicable

Table 33: Internal leakage between two compartments of equipment

S1: Dimensions / Model; S2: Material properties; S3: Surface appearance; S4: Situations and loads							
Part(s)	**Cause of failure / risk**		**Reduction of risks**	**Solution according to RCC-M level 2**	**Documentary proof**	**Residual risks**	
	Level 1	**Level 2**				**Yes/No**	**Requirement for operator**
All	S1	Choice of design that does not ensure the tightness of the bars / fins and sheets connection	Choice of adapted design (sealing connection for the bars / fins and plates) Different tests to ensure tightness: pneumatic	RCC-M ZY310 EES 1.2	Drawing Validation of design choices by the operator Pneumatic test report	No	Not applicable
All	S2	Choice of inappropriate base materials	Selection of a material that does not have an adverse experience feedback for this type of assembly	RCC-M ZY310 EES 4.2 RCC-M C2000 RCC-M S2000	Nuclear PMA and supply specification	No	Not applicable
		Choice of inappropriate filler materials	Selection of a material that does not have an adverse experience feedback for this type of assembly	RCC-M ZY310 EES 4.2 RCC-M C2000 RCC-M S2000	Nuclear PMA and supply specification	No	Not applicable
	S3	Not applicable				No	Not applicable
	S4	Not applicable				No	Not applicable

Table 34: Radiation protection – Risk related to the choice of materials

S1: Dimensions / Model; S2: Material properties; S3: Surface appearance; S4: Situations and loads							
Part(s)	**Cause of failure / risk**		**Reduction of risks**	**Solution according to RCC-M level 2**	**Documentary proof**	**Residual risks**	
	Level 1	**Level 2**				**Yes/No**	**Requirement for operator**
	S1	Not applicable				No	Not applicable
All	S2	Choice of inappropriate base material for environment (possible release of activable elements)	Limitation of activatable elements for circuits classified RP-C	RCC-M ZY310 EES 4.2 RCC-M ZY310 EES 1.2 RCC-M C2400	Nuclear PMA Supply documentation Validation of design choices by the operator	No	Not applicable
		Choice of inappropriate filler material for environment (possible release of activable elements)	Limitation of activatable elements for circuits classified RP-C	RCC-M S2000 RCC-M S2511	Supply documentation Validation of design choices by the operator	No	Not applicable
	S3	Not applicable				No	Not applicable
	S4	Not applicable				No	Not applicable

Table 35: Radiation protection – Deposit risk

S1: Dimensions / Model; S2: Material properties; S3: Surface appearance; S4: Situations and loads							
Part(s)	**Cause of failure / risk**		**Reduction of risks**	**Solution according to RCC-M level 2**	**Documentary proof**	**Residual risks**	
	Level 1	**Level 2**				**Yes/No**	**Requirement for operator**
	S1	Not applicable				No	Not applicable
	S2	Not applicable				No	Not applicable
All	S3	Surface finish which could fix activated / activatable species	Roughness limitation to prevent fixation of activated/activatable species	RCC-M ZY310 EES 3.1	Drawing	No	Not applicable
Id	S4	Wrong consideration of operating constraints	Optimized design to limit areas susceptible to fluid retention and likely to trap deposits (dead zones or areas with very low flow)	RCC-M C3175 RCC-M ZY310 EES 1.2	Drawing Validation of design choices by the operator	No	Not applicable

Table 36: Radiation protection – Risk related to a design not optimized for inspection and maintenance

S1: Dimensions / Model; S2: Material properties; S3: Surface appearance; S4: Situations and loads							
Part(s)	**Cause of failure / risk**		**Reduction of risks**	**Solution according to RCC-M level 2**	**Documentary proof**	**Residual risks**	
	Level 1	**Level 2**				**Yes/No**	**Requirement for operator**
	S1	Not applicable				No	Not applicable
	S2	Not applicable				No	Not applicable

	S3	Not applicable				No	Not applicable
All	S1	Inappropriate design choices: high quantity of inspections and maintenance, complex accessibility, which can lead to longer intervention times	Choice of design in accordance with radioprotection guide: limitation of number of welds	RCC-M C3175 RCC-M ZY310 EES 1.2 Choice of design in accordance with radioprotection guide	Drawing Validation of design choices by the operator	No	Not applicable
		Inappropriate design choices: lack of means to protect personnel from radiation	Choice of design in accordance with radioprotection guide: equipment designed to facilitate the application of biological protection	Choice of design in accordance with radioprotection guide	Drawing Validation of design choices by the operator, The need discussed with the operator	No	Not applicable
		Inappropriate design choices: inability to rinse or decontaminate	Choice of design in accordance with radioprotection guide.	Choice of design in accordance with radioprotection guide	Drawing Validation of design choices by the operator, The need discussed with the operator	No	Not applicable

Table 37: Radiation protection – Cleanliness risk

S1: Dimensions / Model; S2: Material properties; S3: Surface appearance; S4: Situations and loads							
Part(s)	**Cause of failure / risk**		**Reduction of risks**	**Solution according to RCC-M level 2**	**Documentary proof**	**Residual risks**	
	Level 1	**Level 2**				**Yes/No**	**Requirement for operator**
	S1	Not applicable				No	Not applicable
	S2	Not applicable				No	Not applicable
All	S3	Internal state of cleanliness inappropriate to the issues of radiation protection	Appropriate state of cleanliness	RCC-M C4360	Cleanliness and cleanliness control procedure	No	Not applicable
	S4	Not applicable				No	Not applicable

A.2 Section 2: Supply and Manufacturing Analysis

A.2.1 Supply Analysis

To structure the level 1 causes, we will use an approach with different parameters: Material, Method, Stakeholder, Tools, Environment...

Table 38: Supply Analysis – Case of PP (base metal)

Part(s)	Cause of failure / risk		Reduction of risks			Residual risks	
	Level 1	Level 2	Objective	Means	Documentary proof	Yes/No	Requirement for operator
PP	Stakeholder	The material manufacturer is not able to supply the material	Choice of a manufacturer able to supply the material	The material manufacturer has a quality organization certificate covering the ordered product issued by a competent body established in the EU, which is up to date.	Quality organization certificate of the material supplier	No	Not applicable
Id	Model	The supply specification does not correctly include the design requirements.	The supply specification includes the design requirements	Supply specification according to M111 compatible with: Nuclear PMA The technical reference frame (RCC-M) Other requirements identified in design analysis. Note: visual and dimensional inspection can be supported by the component supplier	Supply specification	No	Not applicable
Id	Model	The material is not weldable or brazable	It must be possible to weld or braze the material to the PCRP.	Choice of weldable / brazable material. Verification of materials properties (mechanical and chemical) with a simulation of heat treatment	Supply specification, Certificate EN10204, Nuclear PMA	No	Not applicable

				equivalent to brazing operation on fins, separates plates and bars			
Id	Id	The material/component received does not correspond to the one ordered	The material/component received is in accordance with the supply specification	The manufacturer of the material/component certifies the conformity of the material/component to the order in application of ZZ300. Surveillance of recipe according to C4221.	Certificate of conformity to order type 3.1, issued by the supplier of the material/component. Follow-up document provided	No	Not applicable
Id	Id	Mix of materials	To ensure the traceability of the materials which enter in manufacture	Traceability rule definition of materials from reception, according to C1300	Traceability procedure	No	Not applicable

Table 39: Supply Analysis – Case of parts directly attached to PP by welding (PDA)

Part(s)	Cause of failure / risk		Reduction of risks			Residual risks	
	Level 1	Level 2	Objective	Means	Documentary proof	Yes/No	Requirement for operator
PDA	Stakeholder	The material manufacturer is not able to supply the material	Choice of a manufacturer able to supply the material	The material manufacturer has a quality organization certificate covering the ordered product issued by a competent body established in the EU, which is up to date.	Quality organization certificate of the material supplier	No	Not applicable
Id	Model	The material is not weldable	It must be possible to weld the material to the PCRP.	Choice of weldable.	Supply specification	No	Not applicable
Id	Id	The material received does not correspond to the one ordered	The material received is in accordance with the supply specification	The manufacturer of the material/component certifies the conformity of the material / component to the order in application of ZZ300. Surveillance of recipe according to C4221	Certificate of conformity to order type 2.2, issued by the supplier of the material/component . Follow-up document provided	No	Not applicable
Id	Id	Mix of materials	To ensure the Traceability of the materials which enter in manufacture	Traceability rule definition of materials from reception, according to C1300	Traceability procedure	No	Not applicable

Table 40: Supply Analysis – Case of filler metal for weld and brazing PP

Part(s)	Cause of failure / risk		Reduction of risks			Residual risks	
	Level 1	Level 2	Objective	Means	Documentary proof	Yes/No	Requirement for operator
Filler materials for welding & brazing on PP	Stakeholder	The material manufacturer is not able to supply the material	Choice of a manufacturer able to supply the filler material	The filler material manufacturer has a quality organization certificate covering the ordered product issued by a competent body established in the EU, which is up to date.	Quality organization certificate of the filler material supplier	No	Not applicable
Id	Model	The supply specification does not correctly include the design requirements.	The supply specification includes the design requirements	Supply specification which includes the recipe according to S2000, compatible with: The technical reference frame (RCC-M)	Supply specification	No	Not applicable
Id	Id	The filler material received does not correspond to the one ordered	The filler material received is in accordance with the supply specification	The manufacturer of the material certifies the conformity of the material to the order in application of ZZ300. Recipe surveillance: Adequacy of the reception certificate Compliance of the PV content required by the marking specification	Certificate of conformity to order type 3.1, issued by the supplier of the filler material. Follow-up document provided	No	Not applicable
Id	Id	Mix of materials	To ensure the Traceability of the materials which enter in manufacture	Definition of the rule of traceability of the filler materials since reception, according to S 7200	Traceability procedure	No	Not applicable

A.2.2 Manufacturing analysis

Table 41: Manufacturing analysis: forming, machining, welding, examination, tightening, tests, cleaning

Part(s)	Cause of failure / risk		Reduction of risks			Residual risks	
	Level 1	**Level 2**	**Objective**	**Means**	**Documentary proof**	**Yes/No**	**Requirement for operator**
PP PDA	Material	The materials to be assembled do not correspond to those required in the design - base material	Ensure that the materials used in the manufacturing process conform to those required in the design process	Definition of traceability rules according to C1300	Traceability procedure	No	Not applicable
Welding / brazing on PP	Id	The filler metals do not correspond to those required by the welding / brazing procedure.	Ensure that filler metals used in fabrication conform to those required by the welding / brazing procedure	Definition of traceability rules according to S 7200	Traceability procedure	No	Not applicable
All	Model	Inadequate forming methodology	A forming procedure that ensures compliance with design requirements	Forming procedure according to F 4112 for cutting bars, for degreasing bars, for stamping and cutting of fins, for adding brazing metal on components, for stacking fins/plates and bars, for application for compressive rods, for forming of headers…	Forming operation mode and qualification of forming operation mode	No	Not applicable

Welding on PP	Id	The preparation of the edges to be welded generates or reveals defects	Check the material integrity at the edges to be welded.	Welding specifications (according to S 1120), completed by: - visual inspection before welding according to S7300	Welding book	No	Not applicable
Welding under pressure	Id	Inadequate welding methodology	A welding procedure that ensures compliance with design requirements	Qualification of welding procedures according to S 3200 supplemented by ZY 330. Qualification approved by a competent third party in accordance with ZZ 300. The mechanical characteristics of the weld and ZATs determined in the qualification comply: - The mechanical strength characteristics required for the base metal; - The quantified requirements of the regulations (7.5 + A2-4). Fully penetrated joints, complying with the design requirements of C3350. Welding books according to S1120.	Welding procedure qualification Report Welding book	No	Not applicable
Bars / fins / separate plates Brazing (sealing function)	Id	Inadequate brazing methodology	A brazing procedure that ensures compliance with design requirements (sealing)	Qualification of brazing procedures according to ASME, approved by a competent third party. Brazing specification method according to [xx] Pneumatic tests	Brazing procedure qualification, Reports, Brazing specification, Pneumatic and burst test reports	No	Not applicable

				Burst tests			
Other welds (PDA welds on PP)	Id	Inadequate welding methodology	A forming procedure that ensures compliance with design requirements (do not damage the PCRP)	Qualification of welding procedures according to S 3000 (+ ZZ300), approved by a competent third party. Welding book according to S 1120	Welding procedure qualification report Welding book	No	Not applicable
Bars / fins / separate plates brazing connection	Id	Inadequate brazing methodology	A brazing process that ensures compliance with design requirements: - Resistance to pressure forces - Gap filling	Qualification of brazing procedures according to ASME, approved by a competent third party: - The brazing must ensure the functions of mechanical resistance and sealing between the 2 compartments. - Hydraulic and burst tests	Certification process of brazing operation Brazing procedure Hydraulic and burst tests reports	No	Not applicable
PP Assembly on PP	Id	Inadequate cleanliness	Clean the equipment at the final / appropriate stage of manufacturing to meet design requirements:	Clean-up procedure in accordance with F 6150 that identifies: - the stage of cleanup - The means of cleaning - Means of maintaining cleanliness - Means of restoring cleanliness, if necessary.	Clean-up procedure Cleanliness control procedure	No	Not applicable

			- corrosion resistance - absence of release of potentially activating substances.	The cleaning process includes the passivation of Nickel alloys components. Cleanliness control procedure that identifies: - The stage of cleanliness checks - The cleanliness tests to be performed according to the criteria of F 6210			
PP Assembly on PP	Id	Inadequate packaging and wrapping	Provide packaging and wrapping that protects the equipment from corrosion and impact, and allows for transportation and storage of the equipment under the operator's responsibility	Protection rules according to F 6620 Choice about the risk of corrosion: - internally: nitrogen conditioning and moisture indicator card. - externally: protection by tight enclosure and dehydrating. Choice about the risk of shock: - equipment secured in a wooden case	Packaging procedure	No	Not applicable
Id	Model	Presence of surface imperfections that do not comply with design requirements at the end of the manufacturing process	Guarantee the appearance of surfaces by visual inspection, at the final stage of manufacturing, to ensure compliance with design requirements.	Definition of the visual inspections to be carried out at the final stage, according to MC 7100: - scope defined according to the processes (machining, welding, brazing) - stage of the controls defined according to the manufacturing process - means	Visual inspection procedure	No	Not applicable

				- criteria - records The criteria are those of the design code (RCC-M), according to the methodology fixed in the AFCEN guide. The design does not identify the need to strengthen the criteria of the code.	Certificate 3.1 of the material supplier		
All	Model, Material, surfaces	Use of inappropriate products which could generates issues of cleanliness	Appropriate state of cleanliness	Cleanliness and cleanliness control procedure, RCC-M C4360, Use of PMUC products (for grease, hydraulic test, dye penetrant tests, rinsing…)	Cleanliness control reports	No	Not applicable
Welding on PP	Id	Presence of technological defects in the welds not conforming to the design requirements, at the end of the manufacturing process	Verify the health of welded joints by NDT, at the final stage of fabrication, to ensure compliance with design requirements	Welding books according to S 1120, completed by the identification of the controls to be carried out after welding, according to S 7720: Concerning essential safety requirement A2-3 (100% volume control of welds taking pressure forces): The controls after welding are those of level 2 (S 7720) For welds not volumetrically controllable, realization of a sequential dye penetrant inspection according to S	Welding book NDT procedure Reports	No	Not Applicable

				7720 (The design analysis does not identify any specific risk). Inspection procedures in accordance with S7700 (extent and criteria) and MC + ZY330 (methods)			
Brazing on PP	Id	Presence of technological defects in the brazing not conforming to the design requirements, at the end of the manufacturing process	Verify the health of brazing joints to ensure compliance with design requirements	- Brazing procedure according to ASME - Pneumatic test according to RCC-M and ASME methods - Thermocouples to verify the suitable temperature at different locations on equipment during the operation of brazing	- Brazing procedure - Pneumatic test report - Temperature records - Reports	No	Not Applicable
PP Assembly on PP	Dimension	Failure to observe important dimensions to prevent damage at the end of the manufacturing process	Guarantee the dimensions of the equipment at the final stage of manufacturing to ensure compliance with the design requirements	Definition of dimensional checks to ensure compliance with the important dimensions identified on the equipment drawings at the final stage: The checking fixtures must be adapted to the specified tolerances The inspection stage in the manufacturing process (procurement, machining, welding, brazing) must be fixed in such a way as to allow an adequate inspection of all important dimensions.	Dimensional control procedures Certificate 3.1 of the component supplier	No	Not applicable

				Records. The dimensional checks include the verification of the surface conditions specified in the design and considered important (e.g. the gasket faces).			
PP Stacking of fins and separate plates	Model	Inadequate stacking	Guarantee the correct stacking of fins and plates of the equipment at the final stage of manufacturing to ensure compliance with the design requirements	Drawings Controls at different stage of fabrication Records	Visual control reports	No	Not applicable
PP Assembl y on PP	Model	Inadequate hydrostatic pressure test	Verification of the equipment's resistance	Definition of hydrostatic test procedures in accordance with C 5231 + ZZ300	Hydrostatic testing procedure	No	Not applicable
Welding on PP	Stakehold er	Inapt welding personnel	To ensure the aptitude of the personnel intervening in the welding operations	Qualification of welders or welding operators according to S 4000. Personnel approved by a competent third party in accordance with ZZ 300	Welder qualification approval	No	Not applicable
Welding on PP	Id	Inapt NDT controller	to ensure the aptitude of the personnel intervening in the	Qualification of NDT personnel according to MC8000	Controller qualification approval	No	Not applicable

			NDT activities of the welds	Personnel approved by a Recognized Third-Party Entity in accordance with ZZ 300			
PP Assembly on PP	Id	Non-compliance with procedures	Ensure compliance with procedures during their implementation	Recordings: - Completed intervention follow-up document - Welding data sheet according to S7470 - Fins forming report (indicating at least the reference of the operating mode, the reference of the machine used, the name of the operator - NDT report according to A3602 - Visual inspection report according to MC 7150 - Dimensional inspection report -Destructive inspection report indicating the measured values - Certificate of hydrostatic test and pneumatic test according to C5261 - Cleanliness report according to F6340. Workshop inspection	Records ISO 9001 Certificate	No	Not applicable

A.3 Section 3: Analysis of the activities realized by the operator

Table 42: Common activities at different life phases of the equipment, carried out under the responsibility of the operator

Part(s)	Cause of failure / risk		Means of risk reduction to be prescribed to the operator in the instruction for use
	Level 1	Level 2	
All	Model	Degradation of the equipment due to the use of inadequate products (consumable, cleaning, maintenance…) Degradation of equipment by corrosion…	Requirement: The products used in operation, installation, inspection, maintenance operations shall not release noxious substances (greases for bolts, nuts; insulation; sealing gaskets for the connection to the nozzles…) Respect the cleanliness conditions defined in the design. - Insulation: compliance with F6423 is one way to satisfy this requirement. - Grease, gasket: compliance with the PMUC requirements (Products and Materials Used in Nuclear Power Plants) is one way to meet this requirement…
Bolted connections to nozzles	Model, Material, tools, Stakeholders	The execution of the bolted connections does not satisfy the design requirements. Equipment degradation due to excessive deformation or corrosion degradation associated with leakage. Safety risk to stakeholders after a leak. Radiation protection risk	Bolted connection, under the responsibility of the operator. Requirement: - Respect the appropriate products (bolts, nuts, gaskets…) in terms of dimensions, materials… - Change gaskets after each disassembly - Use appropriate, calibrated and controlled tools (to meet the tightening torque) - Compliance with the geometry of the flange (verification gaskets faces) - Respect of the tightening forces considered in the design of the flange
All	Model, Material	Welding piping conditions (if present) do not meet design requirements. Equipment degradation due to loss of mechanical properties, loss of thickness (grinding, etc.), corrosion…	Requirement: Connect (cutting, grinding, welding operations) according to a procedure that allows to respect the design requirements, the materials and the dimensions of equipment. Respect the requirements of regulation and construction code.
All	Model	Damage to equipment during an activity	Requirement: - Welding on equipment parts under the responsibility of the operator - Grinding, cutting, heating on the parts of the equipment under the responsibility of the operator; - Not to degrade the quality of the surfaces of the supporting faces;

			- To clean the equipment after any installation or maintenance activity affecting its cleanliness (introduction of noxious).
Id	Id	Introduction of migrant bodies during an activity	Requirement: Make provisions to prevent the risk of introducing migrant bodies during activities: installation; inspection or maintenance; operation (introduction by fluids)

Table 43: Installation of the equipment under the responsibility of the operator

Part(s)	Cause of failure / risk		Means of risk reduction to be prescribed to the operator in the instruction for use
	Level 1	Level 2	
All	Model	Non-compliance with conservation / storage requirements before installation Equipment degradation by impact or corrosion…	Requirement: - Respect the modalities of storage to allow the conservation in cleanliness and to avoid damaging the equipment (procedure XXXX) - Carry out periodic checks in case of long-term storage, and reconditioning action to be carried out if necessary. Use specific storage regarding with equipment: - to avoid condensation in the case of dry preservation, - or ensure wet preservation by means of an environment compatible with the materials constituting the equipment, - do not pollute the surfaces of the equipment (by chlorides and fluorides, by ferritic pollution, etc.). Periodically review retention criteria for long-term retention.
Id	Id	Non-compliance with good transport practices. Equipment degradation by impact…	Requirement: - Transportation under the responsibility of the operator.
Id	Id	Damage to equipment during handling, in box. Degradation of the equipment by corrosion, deformation, impact, wear, displacement of a part of the equipment.	Requirement: - Use authorized attachment points with qualified people. - Use means of transport and handling: - adapted to the dimensional and load characteristics of the equipment (weight and center of gravity), - respecting the design assumptions (cleanliness, etc.).
Id	Id	Damage to equipment during handling, outside the box. Space requirements for on-	Requirement:

		site installation, handling requirements and suitable handling means. Degradation of the equipment by corrosion, deformation, impact, wear, displacement of a part of the equipment.	- Use authorized attachment points with qualified people - Respect the position of the exchanger (horizontal/vertical) to allow handling. - Use means of transport and handling: - adapted to the dimensional and load characteristics of the equipment (weight and center of gravity), - respecting the design assumptions (cleanliness, etc.).
Id	Id	Exceeding of the nozzle forces considered at the design stage	Requirement: Ensure compliance with the forces / moments at the interfaces considered in the design
Id	Model	Inappropriate conditions of the installation on which the equipment is to be mounted. Exceeding the allowable limits identified in the design. No safety devices installed on the equipment.	Requirement: -Install adequate protective devices if, under reasonably foreseeable conditions, the permissible limits are exceeded (safety valves on the installation in line with the equipment for all situations). - Protections of the equipment and the safety accessories (for pressure and temperature) shall be compliant with ESS 2.10 and 2.11 of PED (responsibility of operator).
Id	Loading (environment)	The layout of the equipment does not allow for the use of the access opportunities provided in the design (for the maintenance and inspection operations)	Requirement: - Respect the implementation assumptions adopted during the design, - Respect the space constraints allowing the opening and closing operations of the equipment and inspection holes (if present) and the maintenance operations.
Id	Model, Loading	Foundations, requirements, and positioning of supports. Equipment degradation due to a mechanical failure mode (e.g., buckling, progressive deformation, etc.)	Requirement: Use a support system according to the assumptions considered in the design: position of the supports, type of support, number of bolts anchor, forces to be used…
Id	Model, stakeholders	Burn due to surface temperature for stakeholders	Requirement: - Installation of protection for people and equipment (insulation…) with PMUC products and with elements compatible with material of equipment. Respect: - the mechanical requirements for thermal insulation devices, - the conditions for the removal and replacement of such devices.

Table 44: Analysis of commissioning and use operations

Part(s)	Cause of failure / risk		Means of risk reduction to be prescribed to the operator in the instruction for use
	Level 1	Level 2	
All	Model, Loading	Non-compliance with the situations and loads foreseen in the design	Requirement: - Respect situations and loads foreseen in the design - Analyze the impact of not respecting the situations and loads
Id	Id	Non-compliance with the aggressive hypotheses considered in the design	Requirement: - Respect the aggressive hypotheses foreseen in the design - Analyze the impact in case of non-compliance with the aggressive hypotheses.
Id	Loading (environment)	Fluids do not correspond to those provided for in the design	Requirement: - Respect the chemistry of the media as planned in the design - Analyze the impact of changes in or non-compliance with environmental conditions
Id	Id	Ambient conditions are not those provided for in the design	Requirement: - Respect the ambient conditions foreseen in the design - Analyze the impact of changes in or non-compliance with the ambient conditions
Id	Model, Loading	Equipment degradation due to non-compliance with operating design assumptions.	Requirement: - Respect the assumptions expected in the design: fluid chemistry, environment, aggressions, forces at nozzles, forces at supports, pressure, temperature, fluids velocity, type of fluids, seismic level, lifetime, number of cycles, range of stresses, range of temperatures... - In the case of exceedance loads, the operator shall analyze the consequences on equipment
Id	Model	Inappropriate conditions of the installation on which the equipment is to be mounted. Issues with means of draining / venting and consequences (harmful effects, vacuum collapse, corrosion, uncontrolled chemical reactions, no cleaning, no inspection and no maintenance in a safe manner) for all stages of life.	Requirement: - Responsibility of operator for procedures and operations for all stages of life of equipment. If the equipment is not equipped, ensure that the system on which the equipment will be installed: - suitable venting and venting devices, - suitable drain device.

Id	Model	Provisions for filling and discharge in safe conditions to avoid: overfilling, over pressurization, instability of equipment, uncontrolled release of fluid, unsafe connection and disconnection. Equipment degradation due to non-compliance with design assumptions.	<u>Requirement:</u> - Responsibility of operator for procedures and operations for all stages of life of equipment. - the fluid must not induce any risk of corrosion not taken into account in the design, - the quantity of fluid must comply with the assumptions considered in the design, - if applicable, the equipment must be vented or purged.

Table 45: Analysis of control and maintenance operations

Part(s)	Cause of failure / risk		Means of risk reduction to be prescribed to the operator in the instruction for use
	Level 1	Level 2	
All	Model, stakeholder	Incomplete purging of circuits before opening. Equipment degradation and radiological risks.	Requirement: - Drain the equipment completely before opening equipment, inspection holes.
Id	Id	Insufficient depressurization before opening. Temperature still too high. Equipment degradation and risks for stakeholder.	Check for the absence of pressure and temperature before opening.
Id	Model, stakeholder	In-service inspection inappropriate for residual risk	Requirement: Respect the instruction for use and the inspectability note.
Id	Environment	Internal wall corrosion, due to lack of conservation at shutdown.	Requirement: - Dry storage or wet storage with a medium compatible with the materials making up the equipment. Use specific storage regarding with equipment: - to avoid condensation in the case of dry preservation, - or ensure wet preservation by means of an environment compatible with the materials constituting the equipment, - do not pollute the surfaces of the equipment (by chlorides and fluorides, by ferritic pollution, etc.). Periodically review retention criteria for long-term retention.
Id	Model	Internal wall corrosion due to the fluid used during the hydraulic test phase	Requirement: - Carry out the test with a medium compatible with the materials making up the equipment
Id	Stakeholder	Level of activity leading to personnel exposure to excessive doses	Requirement: - It is the operator's responsibility to make provisions for any activities to be carried out in the vicinity of the equipment
Id	Model	Degradation of the equipment due to a failure mode (wear, corrosion, fatigue, etc.) following the degradation of a part	Requirement: Check for damage to parts and replace them if necessary.

Bolted connections to nozzles	Model (removable parts)	Equipment degradation by deformation or corrosion degradation associated with leakage.	Requirement: Use a suitable procedure specifying in particular: - the tightening torque, - the use of a suitable joint, - the use of a bolt assembly (screw, bolt, washer, nut, threaded rod, etc.) adapted, - inspection and lubrication of threaded parts, - the use of an adapted end flange.
All	Model	Degradation of equipment during maintenance, periodic inspection requalification with hydraulic tests, repair, modifications of equipment according to applicable regulations	Requirement: - Responsibility of operator for procedures and operations in compliance with regulations and construction code - Any repair or modification on equipment shall be carried out in accordance with the regulations in force and construction code
All	Stakeholder	Safety risks for stakeholders during maintenance, repair, modifications, inspection and in-service, hydraulic test…	Requirement: - Responsibility of operator for procedures and operations in compliance with regulations and construction code - Any repair or modification shall be carried out in safety conditions with qualified, certified, and skilled stakeholders according to regulations and construction code.

Appendix B Risk analysis of the other elements

This Appendix provides a framework for a risk analysis table to be completed by the manufacturer for:

-Other parts

Table 46: Risk analysis for components that act as a parade

Part (s)	Function	Life phases	Cause of Failure	Means of reducing risk			Existence of residual risk	
				Objective	Means	Method of proof	Yes/ No	Requirement for operator
Not applicable	Not applicable	Not applicable	Not applicable	Not applicable	Not applicable	Not applicable	Not applicable	Not applicable

No spare, removable parts on the equipment.

Appendix C Analysis of regulatory requirements

This Appendix analyses the essential safety requirements from the directive [1] and the ENSPN [2] in order to identify:

- Essential safety requirements not relevant to the application (NA)
- Essential safety requirements that are relevant and treated in the risk analysis (A)

Table 47: List of Essential Safety Requirements of PED Appendix I

List of Essential Safety Requirements of PED Appendix I	Taken into account in Risks Analysis	Justifications / Remarks / Solutions
1 General		
1.1. Pressure equipment shall be designed, manufactured and checked, and if applicable equipped and installed, in such a way as to ensure its safety when put into service in accordance with the manufacturer's instructions, or in reasonably foreseeable conditions.	A	A risks / hazards analysis is performed and Instructions for use is performed based on the conclusions of the risks analysis
1.2. In choosing the most appropriate solutions, the manufacturer shall apply the principles set out below in the following order: — eliminate or reduce hazards as far as is reasonably practicable; — apply appropriate protection measures against hazards which cannot be eliminated; — where appropriate, inform users of residual hazards and indicate whether it is necessary to take appropriate special measures to reduce the risks at the time of installation and/or use.	A	A risks / hazards analysis is performed and Instructions for use is performed based on the conclusions of the risks analysis
1.3. Where the potential for misuse is known or can be clearly foreseen, the pressure equipment shall be designed to prevent risks from such misuse or, if that is not possible, adequate warning given that the pressure equipment shall not be used in that way	A	A risks / hazards analysis is performed and Instructions for use is performed based on the conclusions of the risks analysis

2 Design		
2.1. General The pressure equipment shall be properly designed taking all relevant factors into account in order to ensure that the equipment will be safe throughout its intended life. The design shall incorporate appropriate safety coefficients using comprehensive methods which are known to incorporate adequate safety margins against all relevant failure modes in a consistent manner.	A	Application of code RCC-M. Considered in the risk analysis
2.2. Design for adequate strength 2.2.1. The pressure equipment shall be designed for loadings appropriate to its intended use and other reasonably foreseeable operating conditions. In particular, the following factors shall be considered: — internal/external pressure, — ambient and operational temperatures, — static pressure and mass of contents in operating and test conditions, — traffic, wind, earthquake loading, — reaction forces and moments which result from the supports, attachments, piping, etc., — corrosion and erosion, fatigue, etc., — decomposition of unstable fluids.	A NA	Application of code RCC-M. Considered in the risk analysis The fluid is not unstable.
Various loadings which can occur at the same time shall be considered, considering the probability of their simultaneous occurrence.	A	Application of code RCC-M. Considered in the risk analysis
2.2.2. Design for adequate strength shall be based on either of the following: — as a general rule, a calculation method, as described in point 2.2.3, and supplemented if necessary by an experimental design method as described in point 2.2.4, — an experimental design method without calculation, as described in point 2.2.4, when the product of the maximum allowable pressure PS and the volume V is less than 6 000 bar.L or the product PS·DN less than 3 000 bar.	A	Burst tests for checking permanent assemblies by brazing for fins, bars and separate plates + correct routing for fluids + Design by 2.2.3

2.2.3. Calculation method (a) Pressure containment and other loading aspects The allowable stresses for pressure equipment shall be limited having regard to reasonably foreseeable failure modes under operating conditions. To this end, safety factors shall be applied to eliminate fully any uncertainty arising out of manufacture, actual operational conditions, stresses, calculation models and the properties and behaviour of the material. These calculation methods shall provide sufficient safety margins consistent, where applicable, with the requirements of point 7. The requirements set out above may be met by applying one of the following methods, as appropriate, if necessary as a supplement to or in combination with another method: — design by formula, — design by analysis, — design by fracture mechanics.	A	Application of code RCC-M. Considered in the risk analysis
(b) Resistance Appropriate design calculations shall be used to establish the resistance of the pressure equipment concerned. In particular: — the calculation pressures shall not be less than the maximum allowable pressures and take into account static head and dynamic fluid pressures and the decomposition of unstable fluids. Where a vessel is separated into individual pressure-containing chambers, the partition wall shall be designed based on the highest possible chamber pressure relative to the lowest pressure possible in the adjoining chamber, — the calculation temperatures shall allow for appropriate safety margins, — the design shall take appropriate account of all possible combinations of temperature and pressure which might arise under reasonably foreseeable operating conditions for the equipment, — the maximum stresses and peak stress concentrations shall be kept within safe limits, — the calculation for pressure containment shall utilise the values appropriate to the properties of the material, based on documented data, having regard to the provisions set out in point 4 together with appropriate safety factors. Material characteristics to be considered, where applicable, include: — yield strength, 0.2 % or 1.0 % proof strength as appropriate at calculation temperature, — tensile strength, — time-dependent strength, i.e. creep strength, — fatigue data, — Young's modulus (modulus of elasticity), — appropriate amount of plastic strain, — bending rupture energy, — fracture toughness.	A	Application of code RCC-M. Considered in the risk analysis

— appropriate joint factors shall be applied to the material properties depending, for example, on the type of non-destructive testing, the materials joined and the operating conditions envisaged, — the design shall take appropriate account of all reasonably foreseeable degradation mechanisms (e.g. corrosion, creep, fatigue) commensurate with the intended use of the equipment. Attention shall be drawn, in the instructions referred to in point 3.4, to particular features of the design which are relevant to the life of the equipment, for example: — for creep: design hours of operation at specified temperatures, — for fatigue: design number of cycles at specified stress levels, — for corrosion: design corrosion allowance.		
(c) Stability aspects Where the calculated thickness does not allow for adequate structural stability, the necessary measures shall be taken to remedy the situation considering the risks from transport and handling.	NA	Enough thicknesses for the structural stability during handling and transportation
2.2.4. Experimental design method The design of the equipment may be validated, in all or in part, by an appropriate test program carried out on a sample representative of the equipment or the category of equipment. The test program shall be clearly defined prior to testing and accepted by the notified body responsible for the design conformity assessment module, where it exists. This program shall define test conditions and criteria for acceptance or refusal. The actual values of the essential dimensions and characteristics of the materials which constitute the equipment tested shall be measured before the test. Where appropriate, during tests, it shall be possible to observe the critical zones of the pressure equipment with adequate instrumentation capable of registering strains and stresses with sufficient precision. The test program shall include: (a) A pressure strength test, the purpose of which is to check that, at a pressure with a defined safety margin in relation to the maximum allowable pressure, the equipment does not exhibit significant leaks or deformation exceeding a determined threshold. The test pressure shall be determined on the basis of the differences between the values of the geometrical and material characteristics measures under test conditions and the values used for design purposes; it shall take into account the differences between the test and design temperatures; (b) where the risk of creep or fatigue exists, appropriate tests determined on the basis of the service conditions laid down for the equipment, for instance hold time at specified temperatures, number of cycles at specified stress-levels; (c) where necessary, additional tests concerning other factors referred to in point 2.2.1 such as corrosion, external damage.	A	Burst tests for checking permanent assemblies by brazing for fins, bars and separate plates + correct routing for fluids + Design by 2.2.3

2.3. Provisions to ensure safe handling and operation The method of operation specified for pressure equipment shall be such as to preclude any reasonably foreseeable risk in operation of the equipment. Particular attention shall be paid, where appropriate, to: — closures and openings, — dangerous discharge of pressure relief blow-off, — devices to prevent physical access whilst pressure or a vacuum exists, — surface temperature taking into consideration the intended use, — decomposition of unstable fluids. In particular, pressure equipment fitted with an access door shall be equipped with an automatic or manual device enabling the user easily to ascertain that the opening will not present any risk. Furthermore, where the opening can be operated quickly, the pressure equipment shall be fitted with a device to prevent it being opened whenever the pressure or temperature of the fluid presents a risk.	A	Application of code RCC-M. Considered in the risk analysis
2.4. Means of examination (a) Pressure equipment shall be designed and constructed so that all necessary examinations to ensure safety can be carried out; (b) Means of determining the internal condition of the equipment shall be available, where it is necessary to ensure the continued safety of the equipment, such as access openings allowing physical access to the inside of the pressure equipment so that appropriate examinations can be carried out safely and ergonomically; (c) Other means of ensuring the safe condition of the pressure equipment may be applied in any of the following situations: — where it is too small for physical internal access, — where opening the pressure equipment would adversely affect the inside, — where the substance contained has been shown not to be harmful to the material from which the pressure equipment is made and no other internal degradation mechanisms are reasonably foreseeable.	A	Application of code RCC-M. Considered in the risk analysis
2.5. Means of draining and venting Adequate means shall be provided for the draining and venting of pressure equipment where necessary: — to avoid harmful effects such as water hammer, vacuum collapse, corrosion and uncontrolled chemical reactions. All stages of operation and testing, particularly pressure testing, shall be considered, — to permit cleaning, inspection and maintenance in a safe manner.	A	Considered in the risk analysis
2.6. Corrosion or other chemical attack Where necessary, adequate allowance or protection against corrosion or other chemical attack shall be provided, taking due account of the intended and reasonably foreseeable use.	A	Considered in the risk analysis

2.7. Wear Where severe conditions of erosion or abrasion may arise, adequate measures shall be taken to: — minimise that effect by appropriate design, e.g. additional material thickness, or by the use of liners or cladding materials, — permit replacement of parts which are most affected, — draw attention, in the instructions referred to in point 3.4, to measures necessary for continued safe use.	A	Application of code RCC-M. Considered in the risk analysis
2.8. Assemblies Assemblies shall be so designed that: — the components to be assembled are suitable and reliable for their duty, — all the components are properly integrated and assembled in an appropriate manner.	NA	Not an assembly in sense of regulation
2.9. Provisions for filling and discharge Where appropriate, the pressure equipment shall be so designed and provided with accessories, or provision made for their fitting, as to ensure safe filling and discharge in particular with respect to risks such as: (a) on filling: — overfilling or overpressurisation having regard in particular to the filling ratio and to vapour pressure at the reference temperature, — instability of the pressure equipment; (b) on discharge: the uncontrolled release of the pressurised fluid; (c) on filling or discharge: unsafe connection and disconnection.	A	Considered in the risk analysis
2.10. Protection against exceeding the allowable limits of pressure equipment Where, under reasonably foreseeable conditions, the allowable limits could be exceeded, the pressure equipment shall be fitted with, or provision made for the fitting of, suitable protective devices, unless the equipment is intended to be protected by other protective devices within an assembly. The suitable device or combination of such devices shall be determined on the basis of the particular characteristics of the equipment or assembly. Suitable protective devices and combinations thereof comprise: (a) safety accessories as defined in point 4 of Article 2, (b) where appropriate, adequate monitoring devices such as indicators and/or alarms which enable adequate action to be taken either automatically or manually to keep the pressure equipment within the allowable limits.	A	Considered in the risk analysis
2.11. Safety accessories 2.11.1. Safety accessories shall: — be so designed and constructed as to be reliable and suitable for their intended duty and take into account the maintenance and testing requirements of the devices, where applicable, — be independent of other functions, unless their safety function cannot be affected by such other functions, — comply with appropriate design principles in order to obtain suitable and reliable protection. These principles include fail-safe modes, redundancy, diversity and self-diagnosis.	A	Considered in the risk analysis

2.11.2. Pressure limiting devices These devices shall be so designed that the pressure will not permanently exceed the maximum allowable pressure PS; however, a short duration pressure surge in keeping with the specifications laid down in point 7.3 is allowable, where appropriate. 2.11.3. Temperature monitoring devices These devices shall have an adequate response time on safety grounds, consistent with the measurement function.	A	Considered in the risk analysis
2.11.3. Temperature monitoring devices These devices shall have an adequate response time on safety grounds, consistent with the measurement function.	A	Considered in the risk analysis
2.12. External fire Where necessary, pressure equipment shall be so designed and, where appropriate, fitted with suitable accessories, or provision made for their fitting, to meet damage-limitation requirements in the event of external fire, having regard to its intended use	A	Considered in the risk analysis
3 Manufacturing		
3.1. Manufacturing procedures The manufacturer shall ensure the competent execution of the provisions set out at the design stage by applying the appropriate techniques and relevant procedures, especially with a view to the aspects set out below. 3.1.1. Preparation of the component parts Preparation of the component parts (e.g. forming and chamfering) shall not give rise to defects or cracks or changes in the mechanical characteristics likely to be detrimental to the safety of the pressure equipment.	A	Considered in the risk analysis RCC-M ZY310, F6150, F6350, A3801, F4112, F4132, S7360, S1120 (visual control procedure and report, DNRE control procedure and report, cleaning procedure, Follow-up document, forming procedures and reports, welding books)

3.1.2. Permanent joining Permanent joints and adjacent zones shall be free of any surface or internal defects detrimental to the safety of the equipment. The properties of permanent joints shall meet the minimum properties specified for the materials to be joined unless other relevant property values are specifically taken into account in the design calculations. For pressure equipment, permanent joining of components which contribute to the pressure resistance of equipment and components which are directly attached to them shall be carried out by suitably qualified personnel according to suitable operating procedures. For pressure equipment in categories II, III and IV, operating procedures and personnel shall be approved by a competent third party which, at the manufacturer's discretion, may be: — a notified body, — a third-party organisation recognised by a Member State as provided for in Article 20. To carry out these approvals the third party must perform examinations and tests as set out in the appropriate harmonised standards or equivalent examinations and tests or shall have them performed.	A	Considered in the risk analysis RCC-M S3150, S1900, S2550, ZZ300 EES3.1.2 and EES2.2.3.b, S4200, S1120, S7470, S7870, S7720, A3801 (QMOS and QS approved by notified body, welding book, NDT procedure and reports, follow-up document)
3.1.3. Non-destructive tests For pressure equipment, non-destructive tests of permanent joints shall be carried out by suitable qualified personnel. For pressure equipment in categories III and IV, the personnel shall be approved by a third-party organisation recognised by a Member State pursuant to Article 20.	A	Considered in the risk analysis RCC-M C4233, ZZ300 ESS3.1.3, S7720, A3801 (certification of NDT controllers, NDT reports, follow-up document)
3.1.4. Heat treatment Where there is a risk that the manufacturing process will change the material properties to an extent which would impair the safety of the pressure equipment, suitable heat treatment shall be applied at the appropriate stage of manufacture.	A	Considered in the risk analysis RCC-M F8130, F8140 (reports)
3.1.5. Traceability Suitable procedures shall be established and maintained for identifying the material making up the components of the equipment which contribute to pressure resistance by suitable means from receipt, through production, up to the final test of the manufactured pressure equipment.	A	Considered in the risk analysis RCC-M A3801, C1300, S2600, S7470 (traceability procedure, labelling, follow-up document)

3.2. Final assessment Pressure equipment shall be subjected to final assessment as described below. 3.2.1. Final inspection Pressure equipment shall undergo a final inspection to assess visually and by examination of the accompanying documents compliance with the requirements of this Directive. Test carried out during manufacture may be considered. As far as is necessary on safety grounds, the final inspection shall be carried out internally and externally on every part of the equipment, where appropriate during manufacture (e.g. where examination during the final inspection is no longer possible).	A	Considered in the risk analysis RCC-M ZZ300 EES3.2.1, ZY310 EES 3.2.1 (final examination visual report)
3.2.2. Proof test Final assessment of pressure equipment shall include a test for the pressure containment aspect, which will normally take the form of a hydrostatic pressure test at a pressure at least equal, where appropriate, to the value laid down in point 7.4. For category I series-produced pressure equipment, this test may be performed on a statistical basis. Where the hydrostatic pressure test is harmful or impractical, other tests of a recognised value may be carried out. For tests other than the hydrostatic pressure test, additional measures, such as non-destructive tests or other methods of equivalent validity, shall be applied before those tests are carried out.	A	Considered in the risk analysis RCC-M C5232, C52620, ZZ300 EES3.2.2 (hydraulic test procedure and report)
3.2.3. Inspection of safety devices For assemblies, the final assessment shall also include a check of the safety devices intended to check full compliance with the requirements referred to in point 2.10.	NA	Not an assembly in sense of regulation

3.3. Marking and labelling In addition to the CE marking referred to in Articles 18 and 19 and the information to be provided in accordance with Article 6(6) and Article 8(3), the following information shall be provided: (a) for all pressure equipment: — the year of manufacture, — identification of the pressure equipment according to its nature, such as type, series or batch identification and serial number, — essential maximum/minimum allowable limits. (b) depending on the type of pressure equipment, further information necessary for safe installation, operation or use and, where applicable, maintenance and periodic inspection such as: — the volume V of the pressure equipment in L, — the nominal size for piping DN, — the test pressure PT applied in bar and date, — safety device set pressure in bar, — output of the pressure equipment in kW, — supply voltage in V (volts), — intended use, — filling ratio kg/L, — maximum filling mass in kg, — tare mass in kg, — the fluid group (c) where necessary, warnings fixed to the pressure equipment drawing attention to misuse which experience has shown might occur. The information referred to in points (a), (b) and (c) shall be given on the pressure equipment or on a data plate firmly attached to it, with the following exceptions: — where applicable, appropriate documentation may be used to avoid repetitive marking of individual parts such as piping components, intended for the same assembly, — where the pressure equipment is too small, e.g. accessories, this information may be given on a label attached to that pressure equipment, — labelling or other adequate means may be used for the mass to be filled and the warnings referred to in point (c), provided it remains legible for the appropriate period of time.	A	No CE marking on ESPN. RCC-M ZZ300 EES3.3 and EES3.4, ZY310 EES3.3 and EES3.4 (marking drawing and instruction for use)
3.4. Operating instructions (a) When pressure equipment is made available on the market, it shall be accompanied, as far as relevant, with instructions for the user, containing all the necessary safety information relating to: — mounting including assembling of different pieces of pressure equipment, — putting into service, — use, — maintenance including checks by the user.	A	An instruction for use is drawn up on the basis of the conclusions of the risk analysis.

(b) Instructions shall cover information affixed to the pressure equipment in accordance with point 3.3, with the exception of serial identification, and shall be accompanied, where appropriate, by the technical documents, drawings and diagrams necessary for a full understanding of these instructions. (c) If appropriate, these instructions shall also refer to risks arising from misuse in accordance with point 1.3 and particular features of the design in accordance with point 2.2.3.		
4 Materials		
Materials used for the manufacture of pressure equipment shall be suitable for such application during the scheduled lifetime unless replacement is foreseen. Welding consumables and other joining materials need to fulfil only the relevant requirements of points 4.1, 4.2(a) and the first paragraph of point 4.3, in an appropriate way, both individually and in a joined structure. 4.1. Materials for pressurised parts shall: (a) have appropriate properties for all operating conditions which are reasonably foreseeable and for all test conditions, and they should be sufficiently ductile and tough. Where appropriate, the characteristics of the materials shall comply with the requirements of point 7.5. Moreover, due care should be exercised in particular in selecting materials in order to prevent brittle-type fracture where necessary; where for specific reasons brittle material has to be used appropriate measures shall be taken; (b) be sufficiently chemically resistant to the fluid contained in the pressure equipment; the chemical and physical properties necessary for operational safety shall not be significantly affected within the scheduled lifetime of the equipment; (c) not be significantly affected by ageing; (d) be suitable for the intended processing procedures; (e) be selected in order to avoid significant undesirable effects when the various materials are put together.	A	Considered in the risk analysis
4.2. The pressure equipment manufacturer shall: (a) define in an appropriate manner the values necessary for the design calculations referred to in point 2.2.3 and the essential characteristics of the materials and their treatment referred to in point 4.1; (b) provide in his technical documentation elements relating to compliance with the materials specifications of this Directive in one of the following forms: — by using materials which comply with harmonised standards, — by using materials covered by a European approval of pressure equipment materials in accordance with Article 15, — by a particular material appraisal; (c) for pressure equipment in categories III and IV, a specific assessment of the particular material appraisal shall be performed by the notified body in charge of conformity assessment procedures for the pressure equipment.	A	Considered in the risk analysis Consideration by the notified body if it is a G module

4.3. The equipment manufacturer shall take appropriate measures to ensure that the material used conforms with the required specification. In particular, documentation prepared by the material manufacturer affirming compliance with a specification shall be obtained for all materials. For the main pressure-bearing parts of equipment in categories II, III and IV, this shall take the form of a certificate of specific product control. Where a material manufacturer has an appropriate quality-assurance system, certified by a competent body established within the Union and having undergone a specific assessment for materials, certificates issued by the manufacturer are presumed to certify conformity with the relevant requirements of this point. SPECIFIC PRESSURE EQUIPMENT REQUIREMENTS In addition to the applicable requirements of points 1 to 4, the following requirements apply to the pressure equipment covered by points 5 and 6.	A	Considered in the risk analysis RCC-M M110, ZZ300 EES4.3, S3150, S1900, S2550 (supply specifications for base and filler materials, reports, certification of quality system of material manufacturer)
5. Fired Or Otherwise Heated Pressure Equipment With A Risk Of Overheating As Referred To In Article 4(1)	NA	Not an equipment subjected to fire or heated equipment
6. Piping As Referred To In Article 4(1)(c)		
Design and construction shall ensure: (a) that the risk of overstressing from inadmissible free movement or excessive forces being produced, e.g. on flanges, connections, bellows or hoses, is adequately controlled by means such as support, constraint, anchoring, alignment and pre-tension; (b) that where there is a possibility of condensation occurring inside pipes for gaseous fluids, means are provided for drainage and removal of deposits from low areas to avoid damage from water hammer or corrosion; (c) that due consideration is given to the potential damage from turbulence and formation of vortices; the relevant parts of point 2.7 are applicable; (d) that due consideration is given to the risk of fatigue due to vibrations in pipes; (e) that, where fluids of Group 1 are contained in the piping, appropriate means are provided to isolate 'take-off' pipes the size of which represents a significant risk; (f) that the risk of inadvertent discharge is minimised; the take-off points shall be clearly marked on the permanent side, indicating the fluid contained; (g) that the position and route of underground piping is at least recorded in the technical documentation to facilitate safe maintenance, inspection or repair.	NA	Not a piping
7. Specific Quantitative Requirements For Certain Pressure Equipment		

7.1. Allowable stresses 7.1.1. Symbols Re/t, yield limit, indicates the value at the calculation temperature of: — the upper flow limit for a material presenting upper and lower flow limits, — the 1.0 % proof strength of austenitic steel and non-alloyed aluminium, — the 0.2 % proof strength in other cases. Rm/20 indicates the minimum value of the ultimate tensile strength at 20 °C. Rm/t designates the ultimate tensile strength at the calculation temperature.	NA	7.1.1 is not a requirement
7.1.2. The permissible general membrane stress for predominantly static loads and for temperatures outside the range in which creep is significant shall not exceed the smaller of the following values, according to the material used: — in the case of ferritic steel including normalised (normalised rolled) steel and excluding fine-grained steel and specially heat-treated steel, 2/3 of Re/t and 5/12 of Rm/20, — in the case of austenitic steel: — if its elongation after rupture exceeds 30 %, 2/3 of Re/t — or, alternatively, and if its elongation after rupture exceeds 35 %, 5/6 of Re/t and 1/3 of Rm/t, — in the case of non-alloy or low-alloy cast steel, 10/19 of Re/t and 1/3 of Rm/20, — in the case of aluminium, 2/3 of Re/t, — in the case of aluminium alloys excluding precipitation hardening alloys 2/3 of Re/t and 5/12 of Rm/20.	A	Considered in the risk analysis
7.2. Joint coefficients For welded joints, the joint coefficient shall not exceed the following values: — for equipment subject to destructive and non-destructive tests which confirm that the whole series of joints show no significant defects: 1, — for equipment subject to random non-destructive testing: 0.85, — for equipment not subject to non-destructive testing other than visual inspection: 0.7. If necessary, the type of stress and the mechanical and technological properties of the joint shall also be taken into account.	A	Considered in the risk analysis
7.3. Pressure limiting devices, particularly for pressure vessels The momentary pressure surge referred to in point 2.11.2 shall be kept to 10 % of the maximum allowable pressure	A	Not a safety accessory
7.4. Hydrostatic test pressure For pressure vessels, the hydrostatic test pressure referred to in point 3.2.2 shall be no less than either of the following: — that corresponding to the maximum loading to which the pressure equipment may be subject in service taking into account its maximum allowable pressure and its maximum allowable temperature, multiplied by the coefficient 1.25, — the maximum allowable pressure multiplied by the coefficient 1.43, whichever is the greater.	A	Considered in the risk analysis

7.5. Material characteristics Unless other values are required in accordance with other criteria that shall be taken into account, a steel is considered as sufficiently ductile to satisfy point 4.1(a) if, in a tensile test carried out by a standard procedure, its elongation after rupture is no less than 14 % and its bending rupture energy measured on an ISO V test-piece is no less than 27 J, at a temperature not greater than 20 °C but not higher than the lowest scheduled operating temperature.	A	Considered in the risk analysis

Table 48: List of Essential Safety Requirements of ESPN Appendix III

List of Essential Safety Requirements of ESPN Appendix III	Considered in Risks Analysis	Justifications / Remarks / Solutions
Preliminary and general The operator shall provide the manufacturer with a description of all the situations in which the equipment may be found, in accordance with the safety report for the installation for which it is intended, supplemented by the associated records, as well as all the loads to be taken into account for each situation. The manufacturer carries out the risk analysis provided for in paragraph 3 of the preliminary remarks of Appendix I of the aforementioned Directive of 15 May 2014, taking into account the data provided by the operator and the radioactive nature of the fluid it will contain.	A	Considered in the risk analysis
Design The equipment is designed to minimize the risk of loss of integrity by considering possible material alterations. The design considers aging due to irradiation.	A	Considered in the risk analysis
Manufacturing Pressure-resistant welds are subjected to appropriate non-destructive testing. The competent third party that approves the operating procedures and personnel for permanent assemblies is an authorized body within the meaning of 11. a) i. or 11. a) ii. of Article R. 557-4-2 of the Environmental Code. The recognized third-party entity which approves the personnel who carry out non-destructive testing of permanent assemblies is an authorized body within the meaning of 11. a) ii. Article R. 557-4-2 of the Environment Code.	A	Considered in the risk analysis

Table 49: List of Essential Safety Requirements of ESPN Appendix IV

List of Essential Safety Requirements of ESPN Appendix IV	Considered in Risks Analysis	Justifications / Remarks / Solutions
Materials The choice of materials is made considering their possible activation and the release of corrosion products that may, because of activation, require radiation protection measures in operation.	A	Considered in the risk analysis RCC-M F6150, F6350 (cleaning and control cleaning procedures and reports)
Design The design of any equipment that must be subjected to corrosion, erosion, internal abrasion or other chemical attacks during operation is subject to appropriate measures to limit as much as possible the release of products and avoid their activation.	A	Considered in the risk analysis
Means of inspection and maintenance The equipment is designed in such a way that all the operations provided for in application of Articles L. 557-28 and L. 557-29 of the Environmental Code can be carried out in such a way as to ensure, in compliance with the principles and rules defined by the Public Health Code and the Labor Code, the radiation protection of persons carrying out or monitoring these operations.	A	Considered in the risk analysis

Table 50: List of Essential Safety Requirements of Radioprotection guide

List of Essential Safety Requirements of Radioprotection guide	Considered in Risks Analysis	Justifications / Remarks / Solutions
4 Radiation protection provisions 4.1 General, For all the RP-A, RP-B and RP-C circuits, a distinction is made between the requirements: — to limit the activity of the circuits and materials (section 4.2.) — to limit leakage (§ 4.3.), — allowing optimization, in terms of radiation protection, inspection and maintenance of the equipment (§ 4.4.).	A	Considered in the risk analysis
4.2 Requirements for limiting the activity of circuits and materials The limitation of activity is achieved by the following provisions applicable to all ESPN classified as level N1, N2 or N3: — provisions concerning the choice of materials, for the RP-A, RP-B and RP-C circuits (§4.2.1) — provisions concerning cleanliness, for the RP-A and RP-B circuits (§4.2.2) — provisions to reduce the risk of deposits (§ 4.2.3.).	A	Considered in the risk analysis
4.2.1 Choice of materials to limit the activity of the fluid and materials The choice of the material of the ESPN is decisive for the composition of the activity spectrum of the primary fluid in corrosion products. Materials with a wetted surface contribute to the overall inventory of activatable elements, through their release (corrosion, erosion, wear and tear during operation...). The maximum required cobalt contents of the materials constituting the pressure vessels, the internals and the welds in contact with the primary fluid are given in Table 1 of Radioprotection Guide for materials without neutron flux. The choice of vessel material is also a determining factor for operations (inspections) and decommissioning. This concerns components* under neutron flux, whether they are wetted or not (core shells and vessel internals). In this respect, the materials making up the pressure vessel and internals subject to irradiation, whether in contact with the primary fluid or not, are subject to special requirements (see Table 2 of Radioprotection Guide). For weld filler materials and coatings, the cobalt content, when required, is verified during acceptance tests on the product or on deposited metal (welds and coatings). It should be noted that no significant difference is expected between the recipe tests and the production weld analyses, due to the low cobalt content of the base metal.	A	Considered in the risk analysis
Finally, specific provisions are identified in the following cases: — the tube bundle of steam generators (§ 4.2.1.1),	NA	The Nuclear Pressure Equipment is not a steam generator.

— hard coatings of the valves of the RP-A, RP-B circuits (§ 4.2.1.2),	NA	The Nuclear Pressure Equipment is not a valve.
— cobalt-based alloys of other ESPNs of the RP-A and RP-B circuits (§ 4.2.1.3),	NA	The equipment is classified RP-C
— the contents of the activatable elements other than cobalt in the ESPN on the RP-A and RP-B circuits (§ 4.2.1.4),	NA	The equipment is classified RP-C
— the materials of the ESPN of the RP-C circuits (§ 4.2.1.5).	A	Considered in the risk analysis
4.2.1.1 Tubular steam generator harness	NA	The Nuclear Pressure Equipment is not a steam generator.
4.2.1.2 Hard valve coatings of RP-A and RP-B systems	NA	The equipment is classified RP-C
4.2.1.3. Cobalt-based alloys of other ESPNs on RP-A and RP-B circuits	NA	The equipment is classified RP-C
4.2.1.4 Other activatable ESPN elements on RP-A and RP-B circuits	NA	The equipment is classified RP-C
4.2.1.5 ESPN materials on RP-C circuits There are no specific requirements on the choice of materials for these circuits in terms of radiation protection; the use of standardized material specifications is sufficient.	A	Considered in the risk analysis
4.2.2 Requirements for cleanliness and cleanliness control of RP-A and RP-B circuits	NA	The equipment is classified RP-C
4.2.3 Limitation of deposits on RP-A, RP-B and RP-C circuits The whole of the ESPN must be studied and designed in such a way as to limit the risks of deposition of corrosion products at the origin of the "hot spot" phenomena. The geometry of the walls of the equipment in contact with the contaminated fluid must not include areas subject to fluid retention, likely to trap corrosion product deposits (such as dead zones or areas with very low flow). For example: — socket-welding is prohibited on all DN> 25 piping, including connected piping, with the exception of spare parts where socket-welding is prohibited: o **on N1 pipelines of DN ≥ 50,**	A	Considered in the risk analysis

o **on N2 or N3 piping of DN > 50.** — suitable slopes and drains will be provided to ensure effective emptying of containers, piping and accessories under pressure, — for all circuits carrying active fluids, if equipment installed on horizontal portions of circuits require connection sleeves, the use of eccentric reductions is mandatory in order to ensure perfect alignment of the lower generators of the connected pipes, — the use of cast steel is tolerated for cumulated wetted surfaces greater than 1m2, provided that the maximum surface roughness is defined as follows Ra < 6.3 µm for a machined ground material and Ra < 12.5 µm for a rough material. In addition, the operator may require specific surface finishes for certain equipment surfaces, in order to reduce surface contamination and limit the dose to operators during planned operations.		
4.3 Limiting the risk of leakage from RP-A, RP-B and RP-C circuits The manufacturer should use permanent joints to avoid the risk of leakage to the outside, except when the connection must be dismantled frequently. Thus, welded joints are to be preferred for piping and connections between equipment. When the sealing between components of the same equipment (for example: body / bonnet and gland connection of a valve) or between equipment cannot be achieved by a welded joint, the design choices must be made in order to limit the risk of leakage to the outside in reasonably foreseeable situations. Thus, the valves of all circuits carrying active fluids must be sealed at the stem: o **either by a double sealing barrier for DN > 50 (e.g. 2 seals, 2 glands in series, a bellows and a seal or a gland) with an intermediate device allowing leak detection or collection,** o **or by another device subjected to a leakage test proposed by the manufacturer* in agreement with the operator.** For the tightness between two compartments of the same equipment, the operator will indicate if, in addition to the technical reference chosen for the design and manufacture, leaks between the two compartments are acceptable or must be avoided. For shell-and-tube heat exchangers, the operator shall indicate in particular whether the exchange tube-to-tube plate connections must be welded.	A	Considered in the risk analysis
4.4 Design to optimize inspections and maintenance Pressure equipment must be designed in such a way that all operations provided for in application of the order of 30 December 2015 on nuclear pressure equipment (periodic inspections and re-qualifications, operations from the instruction manual, specific inspections by the operator, other known maintenance operations...) can be carried out in such a way as to ensure control of the radiation protection of the persons carrying out or supervising these operations. The manufacturer shall make technical arrangements to facilitate the performance of operations and to ensure protection from radiation. These technical provisions concern, if necessary — Limiting the number of areas requiring specific inspection in conjunction with the risk analysis and instruction manual, for risks that have not been totally eliminated.	A	Considered in the risk analysis

— Easy access to the areas for which an inspection is planned in the instruction manual, for risks that have not been completely eliminated after the risk analysis, and for inspections required by the operator. This includes the setting up of inspection devices adapted to the radiation protection issue when such devices are necessary to meet the objectives of the inspection. — Accessibility of areas that may require maintenance operations, as well as optimization of the time required for these operations (e.g. dismantling-replacement-reassembly). — The ease of installation of specific biological protections (their assembly/disassembly). — The installation of heat insulation with quick assembly and disassembly. — The installation of means to decontaminate the ESPN concerned (for example, installation of specific nozzles). The manufacturer integrates the issue of radiation protection in his design process, taking into account — the radiological context provided by the operator, — the frequency of operations in operation. The operator ensures that the solutions proposed by the manufacturer are appropriate and in line with the measures that he plans to implement (protective measures, decontamination, insulation, etc.). This is done through an exchange of views, the conclusions of which are recorded and become an input to the risk analysis. When radiation protection issues are important, this exchange can be organized during a design review. In particular, the instruction manual indicates the measures to be taken during operation in the event of a risk that has not been completely eliminated during design or manufacture, and specifies, for example, whether special protection or provisions must be taken by the operator in relation to the operating operations foreseen at the design stage.		

Appendix D List of DNRE

References DNRE	Designation of part	DNRE of the part	Value to be measured	Specification limits from design	Specfication limits reduced by EMT	Procurement standard	Drawing reference	Control stage	Measuring device	Measuring range (Resolution) of measuring device
A1	Head outlet fluid 1	External diameter of pipe nozzle	60.3 mm	± 1 mm	± 1 mm	NFEN 10216-5	xxx	Procurement	Calliper	0-300 (0,01)
A2		Thickness of pipe nozzle	2.6 mm	± 0,1 mm	± 0,07 mm	NFEN 10216-5	xxx	Procurement	Measuring arm	0-60 (0,03)
A3		Position of nozzle on head	200.0 mm	± 2,0 mm	± 1 mm	-	xxx	After permanent assembly	Tape measure	0-300 (1)
A4		Closure end diameter	88.9 mm	± 1 mm	± 1 mm	NFEN 10216-5	xxx	Procurement	Calliper	0-300 (0,01)
A5		Closure end thickness	3.2 mm	± 0,1 mm	± 0,07 mm	NFEN 10216-5	xxx	Procurement	Measuring arm	0-60 (0,03)
A6		Outside diameter flange	19.0 mm	± 0,1 mm	± 0,07 mm	NFEN1092-1	xxx	Procurement	Measuring arm	0-60 (0,03)
A7		Diameter drilling flange	100.0 mm	± 2,0 mm	± 2,0 mm	NFEN1092-1	xxx	Procurement	Calliper	0-150 à 0-300 (0,01)
B1	Support	Weld throat pipe support / plate	4.0 mm	min	4.1 mm mini	-	xxx	After assembly	Throat measuring	0-20 (0,1)
B2		Position of support	200.0 mm	± 2,0 mm	± 1 mm	-	xxx	After permanent assembly	Tape measure	0-300 (1)
R1	All	Internal roughness	3,2 ou 6,3 microm	mini	mini	-	xxx	After permanent assembly	Visual touch pad	-
U1	All	Out of roundness	2,0 mm	maxi	2,0 mm maxi	-	xxx	Procurement	Calliper	0-300 (0,01)
T11	Sampling	Thickness of fin	1,0 mm	± 0,1 mm	± 0,07 mm	NFEN 10028-7	xxx	After forming and brazing	Measuring arm	0-60 (0,03)
H11		Heigh of fin	50,0 mm	± 1 mm	± 1 mm	NFEN 10028-7	xxx	After forming and brazing	Calliper	0-300 (0,01)
F11		Fins Per Inch (FPI)	20,0 mm	± 1 mm	± 1 mm	NFEN 10028-7	xxx	After forming and brazing	Calliper	0-300 (0,01)
yyy	yyy	yyy	yyy	yyy	yyy	yyy	yyy	yyy	yyy	yyy

Appendix E Example of bilingual examination certificate

Identification manufacturer: FIVES CRYO	Report of dimensionnal Controls / Measurements N° report: XXXX			N° Operation: YYYY
Client: Edf	Order: sssss	Stage control: after welding		
Part: pipe item zz	Grade:			
Procedure: tttt	Revision: 01	Drawing: vvvv	Revision: 02	
Scope operation:				
Temperatures (°C):	Room	Part	Measuring devices	
	21	21	20	
Configuration part:	in horizontal position welded on part item bb			
Surface conditions:	Unmachined	Machined	Grinded	Other:

MEASUREMENTS

	Thickness	Outside diameter	
Nominal value:	150mm	480mm	
Tolerance:	Mini	+/-2mm	
Measuring devices:	UT:	Caliper: Measuring range 600mm Resolution 0,02mm	
N° measuring devices:	qqq	aaa	
EMT or uncertainty measurement	0,25mm	0,02mm	
Compliance criteria	150,25mm mini	480 +/-2mm	
Measured values	Mini	Value 1	Value 2
	150,10 / 150,35 / 150,41 / 150,50	481	480
Conformity results (C/NC):	NC	C	

N° non compliance sheet		123364		
Remarks: -				
Date control/measurement	Start: 20/10/22		End: 21/10/22	
Person in charge measurement	Name: aert	Date: 21/10/22	Company: FIVES CRYO	Visa: m m lm
Person in charge verification	Name: reat	Date: 21/10/22	Company: FIVES CRYO	Visa: lddnxj
Adress manufacturer: FIVES CRYO 25bis rue du Fort 88190 GOLBEY FRANCE				

Appendix F Radiographic Control Procedure

F.1 Purpose

This procedure defines the modalities of radiographic examinations:

- Preparation of surfaces - extent of inspection
- Execution of the control
- Acceptance or rejection of the materials under consideration

This section doesn't deal with the execution stage, which is the responsibility of the quality plan.

F.2 Scope

This Technical Instruction applies to the examination of welds of CHX and DUHS exchanger connections.

- RCC-M Quality Level: Level 2
- ESPN Classification: Level N3
- Material group: Austenitic stainless steel of group 8.1

It is about:

- Butt welding
- Fillet weld with full penetration

For

- Welding procedure qualifications
- Possible representative production test piece,
- Limited for thickness < 50 mm.

F.3 State of materials submitted for examination (MC3312.3 and MC3141)

F.3.1 Surface condition

Surfaces must be clean. Oxides, foreign matter, and irregularities that may interfere with the interpretation of the X-rays are removed by mechanical means (shot blasting, grinding, machining, sanding...).

The visual examination of the accessible surfaces of the welds and the compliance with the corresponding criteria, in particular the removal of gutters, are carried out before the radio control.

F.3.2 Marking

It is carried out according to the procedure of Marking-Traceability.

Near each weld of diameter ≥ DN 80 is indicated by a marker, if possible with a stamped or engraved marker (depending on materials or thickness) consisting of 2 arrows, the starting point and the direction of rotation of the controls, according to the diagram below (alternatively, the marker O→ is also acceptable).

The horizontal arrow (unless otherwise specified: specific marking plan, positioning in relation to a ''V'' line, etc...) is located 25 mm from the edge of the weld, the vertical arrow being directed towards the weld.

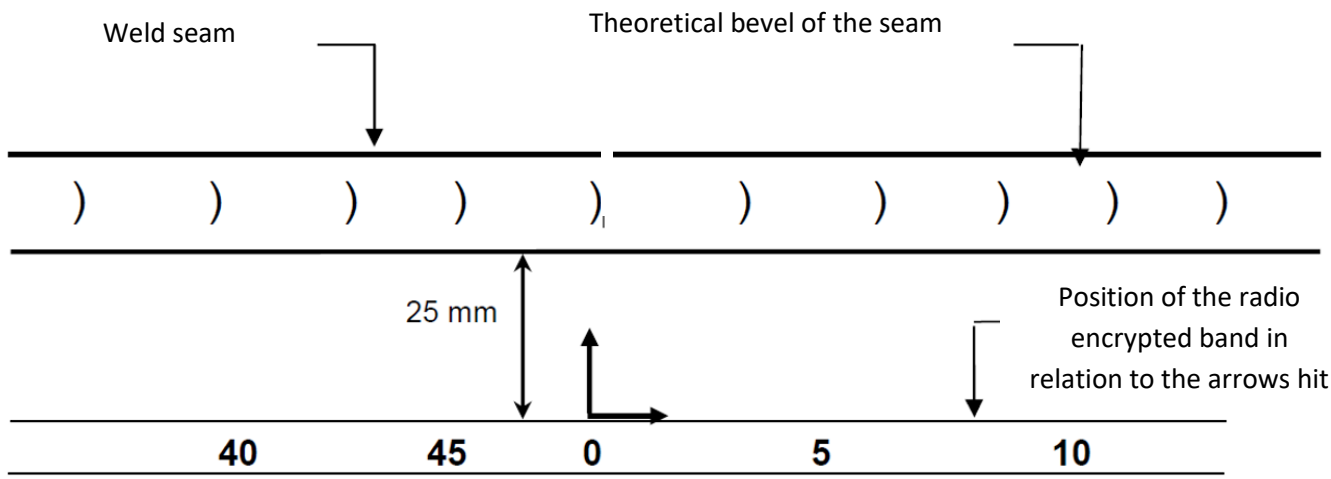

Marks A, B, C are struck under the same conditions in the case of welds carried out by remote technique. The A represents the starting point of the controls.

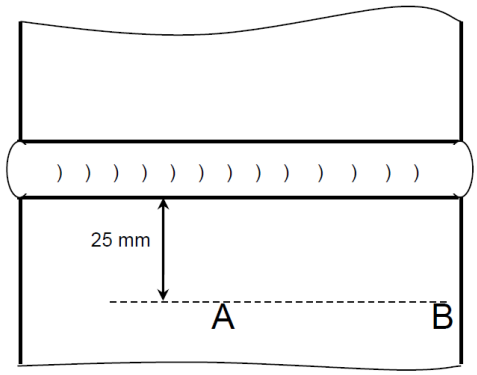

F.4 Operational staff (MC8000)

Personnel must be qualified and certified according to EN ISO 9712.

The team will be composed at least of an operator certified Level 1 according to this standard, and all the personnel assigned to the taking of photographs will hold the CAMARI (Certificate of aptitude to handle ionizing radiation devices).

The interpretation of the radiograms is carried out by a COFREND certified agent, at least Level 2 RT, with a valid card.

F.5 Equipment

F.5.1 Radiating sources (MC 3142)

Iridium 192, Selenium 75, or X-Ray generators are used regarding with thickness.

CHOICE OF RADIATION SOURCE ACCORDING TO TOTAL WALL THICKNESS	
Radiation source	**Welded joints**
X-rays 100 ≤ voltage ≤ 400 kV	≤ at 70 mm
Iridium 192 **Selenium 75**	≤ 100 mm ≤ 40 mm

F.5.2 Radiographic films (MC3312.4)

Film systems are used with metal shields. They are classified into six classes C1 to C6 according to NF EN ISO 11699-1.

Films must not be used after the expiry date stated by the manufacturer. They must be kept before treatment under the temperature and humidity conditions recommended by the film manufacturer and protected from ionizing radiation.

Exposure to Ir 192:

Films classified C1 to C2 according to EN ISO 11699-1.

For welds thicker than 16 mm and outside level 1, the use of class C3 films is allowed subject to obtaining the image quality required in F.12.

Exposure to X-rays:

Films up to and including class C4.

Exposure to Se75:

Films classified C1 to C3.

For welds with a thickness > 16 mm and out of level 1, the use of class C4 films is allowed.

For thicknesses < 16 mm, class C4 is admitted subject to obtaining the image quality required in F.12.

F.5.3 Intensifying screens (MC 3133 - MC 3146.2)

Gamma radiation with Ir192 and Se 75

The double film technique is used systematically.

The Intensifying screens are made of lead alloy. The thicknesses of which are defined below. They are kept clean, polished, and free of scratches to ensure a very good photographic quality.

Isotope	**Anterior lead Screen**	**Intermediate lead Screens**	**Posterior lead Screen**
Ir192	0.20 mm - 0.25 mm	2 x 0.10 mm	0.20 mm - 0.25 mm
Se75	0.10 mm - 0.20 mm	2 x 0.05 mm	0.10 mm - 0.20 mm

With X-rays

a) X-voltage radiations <100 kV

The simple film technique is used. The use of intensifying screens is not imposed.

b) X voltage radiation ≥100 kV and ≤400 kV

The double film technique is used. The cassette includes:

- an anterior lead screen with a thickness between 0.05 mm and 0.15 mm
- an intermediate lead screen with a thickness between 2 x 0.05 mm and 2 x 0.10 mm, the thickness of each screen is always less than that of the anterior screen
- a posterior lead screen with a thickness between 0.05 mm and 0.20 mm

Note 1 ➔ For thicknesses less than 30 mm, the use of intermediate screens is not required for the double film technique.

Note 2 ➔ For thicknesses less than 30 mm, the simple film technique can be used by retaining the thicknesses defined above at the anterior and posterior screens.

F.5.4 Anterior filter (MC 3134 - MC 3147)

With Ir192 and Se75

- Ir192: 0.5 mm anterior lead filter for radiograph thicknesses ≤40 mm
- Se75: No filter on thicknesses <20 mm

With *X-rays*

The use of anterior filter is not imposed for voltages <400 kV

F.5.5 Posterior filter (blocking) (MC 3135 - MC 3148 - MC 3312.5.3)

A posterior (blocking) lead filter at least 2 mm thick should be used.

To check for the absence of backscattered radiation, a lead letter "B" between 1.5 mm and 2 mm is placed at the back of the block to ensure its effectiveness. If the letter "B" appears more clearly on the radiogram, it must be refused. If it appears darker, or remains invisible, the radiogram is acceptable.

F.5.6 Image quality indicators (IQI) (MC 3136 - MC 3145.2 - MC 3162.1 - MC 3312.6)

Hole-and-step or wire image quality indicators are used as defined by NF EN ISO 19232-1 and 2.

The hole or wire that is required to be visible should not be the smallest hole or wire in the IQI used.

The IQI is chosen based on the thickness to be X-rayed according to the tables in F.12**.**

IQIs are placed on the face of the room facing the radiation source whenever possible. In the event of impossibility, a test must be carried out on a representative part for which it is possible to place an IQI on the film side and another source side to determine a match between the indications of the two IQIs.

Individual exposure

- Case of butt-welded joints

When the double film reading can be performed on the entire area to be examined, as expected at 8.3: an IQI is placed at one end of the useful part of the film.

- Butt-welded joints between materials of different thickness or nature

When, in addition to the double film reading, a single film reading is made as intended at 8.3: an IQI adapted to the thickness or nature of the X-rayed material must be placed on each component of the assembly, at the end of the useful area of the film, if the geometry of the seal allows.

In the case of corner welds, when a wired IQI is used, it is arranged to project itself into the area under review. In cases where the width of this area is large, the IQI is placed to project as much as possible into the least dense area.

Panoramic exposure

The provisions of the individual exhibition are to be applied on at least two substantially opposite locations of the panoramic area.

In cases where the external diameter is greater than 200 mm, these provisions must be applied on at least three regularly arranged locations.

See also 7.3.3 for the positioning of IQIs

The image quality is determined according to the provisions of F.12

F.6 Terms and conditions of examination

F.6.1 Un-sharpness – geometry conditions (MC 3143 - MC 3312.5.2)

For the calculation of geometric un-sharpness, the following formula is used:

$$f = \frac{d.a}{F - a}$$

With:

f = geometric Un-sharpness in mm,

d = dimension of the radiation source in mm,

a = distance between the impact face of the part examined and the cassette containing the films in mm,

F = source - film distance in mm.

The distance "a" is equal to the thickness of the part in the case of contact or panoramic methods and the external diameter in the case of plan-on-plane or ellipse methods.

- **For Ir192, with cylindrical source:** the useful length of the source to be considered for the calculation of the Un-sharpness is:
  - either the height (length) "h" if the axis of the source is parallel to the plane of the film in one-way emission, or to the axis of the weld in panoramic emission.
  - or the diameter "d" if the axis of the source is perpendicular to the plane of the film in one-way emission.
  - In the case of a multi-directional issue, the largest of the two values is retained.

These cases are represented in F.13**.**

- **For Se 75, with octagonal form source:** the 'd' dimension of the source to be taken into account is the diameter regardless of the orientation of the source (axis of the source parallel or perpendicular to the plane of the film.)

The allowable geometric Un-sharpness is consistent with the table below:

Source	Welded seals
X-rays < 400 kV Ir 192 - SE 75	≤ 0.30 mm

For welded seals, this value can be increased to 0.60 mm for Ir192 and Se 75 for methods 5 or 7 presented in F.13 (out-of-center or panoramic) provided that:

- The source used at dimensions considered industrially as minimal
- Replacing the exposure technique with the external source (method 2 and 6 in F.13) would lead to implementation times (placement of cassettes, source and installation time) that are industrially unacceptable, the source being used before the end of the second radioactive period.

During radiography on nozzle, the "F" distance to be considered for the calculation of the geometrical Un-sharpness is the most important distance (flanks or corner angles).

F.6.2 Operating modes (MC3312.5)

F.13 shows the different configurations to use to make radiographs.

F.6.3 Operating techniques

The double film technique is mandatory, except in the case of X-rays on thickness < 30 mm where the single film technique is allowed by retaining the thicknesses defined above for the anterior and posterior screens. Films are always placed as close as possible to the welds to be radiographed.

Composition of cassettes (MC 3146.2)

A cassette is made up, in order:

- posterior filter (blocking) with a thickness
- a posterior Intensifying screen of thickness
- two films separated by a double intermediate Intensifying screen of thickness or a single film
- anterior Intensifying screen of thickness
- anterior filter of thickness

Depending on the thickness, the posterior or /and anterior filter may be placed outside the cassette.

Film Identification (MC 3149.2)

Each weld is assigned specific marks. These marks are revealed during the development on the plates by means of letters and numbers in lead positioned during the exposure or another process (luminous marking). Each film must be identified by:

- The site's reference
- Order number
- Drawing number
- Controlled weld number (confirmed by numbers and letters in lead in the case of light marking).

These markers are arranged so that they always appear outside the area to be examined.

The number of films and the overlap allow in all cases to radiograph the entire volume of the area to be examined.

For ellipse images, the numbered band can be replaced by an individual marking of each image with letters A-B.

For the radiographs in plane/plane technique, each view is marked individually, the 2 or 3 marks A-B or A-B-C being affixed together before the exposures, on a straight part of the pipe, close to the weld, and outside the area of interest.

As many views as necessary are taken to cover 100 % of the welded volume.

After repair, the control film is marked with the letter "R" in addition to the mark. If the film is taken after a second repair, "R2" is shown and again. These indications are placed outside the area to be examined.

IQI's Position (MC 3145 - MC 3312.6)

Step and hole IQIs are placed outside the molten metal at least 5 mm (radiographed thicknesses ≤ 30 mm) from the edge of the seam, and if possible, in such a way that they are not projected into the image of the area under examination. In cases of use on pipe welds of diameter ≤ 120 mm, they are placed in the median plane of the exposure.

Wire IQIs are placed across the weld and their positioning must ensure that at least 10 mm of wire length is visible in an area of uniform density.

Exceptionally, for diameters < 90 mm made in plan-on-plane, the wires can be directed parallel to the weld to facilitate the identification of the wires.

Film processing (MC 3151)

The film/product pairing from the same manufacturer is respected, as well as the system used to verify the archivability of the images. When manually processing, as with automatic processing, the manufacturer's recommendations must be respected.

→ Manual processing

The manufacturer's requirements must be respected.

Before being put into service, the new baths are aged by developing about ten exposed films (daylight).

- Development: 5 to 8 min at 20 °C ± 1 °C
- Rinsing: under running water for about 2 min
- Fixing: minimum 10 min at least 19°C and 23°C at the most
- Rinsing: minimum 30 min at least 15°C in running water
- Drying: slow or fast away from dust and heat sources

Outside of the periods of use the tanks are covered with their lid (fixer and chemical developer).

The chemical developer or fixer baths are changed after the development of about 0.5 m^2 of film per liter of chemical developer or at the latest two months after they have been put into operation.

A wetting agent can be used in the rinsing water to prevent dripping during drying.

→ Automatic Processing

Operating mode: depending on the equipment used and the manufacturer's prescriptions.

→ General Provisions

Manual and automatic processing are carried out if possible, within 8 hours of exposure and absolutely within 24 hours.

Precautions are taken to ensure that developed films are free of any chemical or mechanical defects, workmanship or handling that may interfere with the inherent defects of the part.

The water used for all processing operations must be clean, without suspended particles and possibly filtered.

If the defect is minor and concerns only one of the films on the same cassette, this film is not taken back.

→ Checking the quality of X-ray film processing

The thiosulfate ion content is checked by means of kits distributed by the manufacturer at regular intervals. (3 months to avoid many reprocessing of films in case of non-conformity) or at each significant modification of the concentration of development products.

This test is performed within a maximum of one week after processing. The checks are recorded on a follow-up table.

If the test shows a concentration of thiosulfate ions > 0.050 g/m2 corresponding to the range 3 of the hypo-estimate, an audit of the means of development is carried out, and the films concerned undergo a reprocessing followed by a control.

If a reprocessing is required, it will be done as follows:

- Soak or rinse in water with T° between 15 °C and 25 °C
- Passing through the fixer followed by a wash

A maximum of two reprocessing is allowed.

For AGFA films, the test is carried out using the STRUCTURIX-THIOTEST and the charter THIOTEST in accordance with the manufacturer's instructions and recommendations.

Film Archiving Conditions (MC 3151)

After processing, the films are archived according to the recommendations of the film manufacturer and the following additional requirements:

- Packaging: Developed films are placed between straddles and thin paper used for packaging blank films.

  The set of films and straddles is placed in thin paper sleeves, which are themselves placed in thick cardboard boxes.

  The sleeves and boxes used for archiving must be placed on the field to avoid subjecting the films to the pressure of stacking.
- Storage furniture: Sleeves or boxes are placed in storage furniture, which must be non-combustible and are not likely to release fumes that could damage archived documents.
- Archive rooms: These rooms must be kept clean and must not be subject to flooding, and without the presence of pipes carrying liquid effluents. Fire protection must be provided by means other than water extinguishers.

Precautions are taken against insects and rodents, and apart from X-ray images, these rooms can only contain paper folders or magnetic tapes.

- Environmental conditions:
- Temperatures should not normally exceed 21 °C, occasionally 24 °C, and for short periods of time, should not exceed 32 °C
- The recommended range of relative humidity is 30 %-50 %, occasionally and for short periods, it can reach 60 %.
- The films should not be exposed to light and should be stored in closed storage spaces, furniture, or packaging.
- Unnecessary handling of the films should be avoided.

F.7 Review of results

F.7.1 Radiography quality

Preventive measures (MC 3152)

To avoid excessive sail densities due to film aging, development or temperature, the sail density must be checked at least once every six months in automatic development or at each bath change in manual development, on a sample of an unexposed batch, then treated and developed under the same conditions as the actual X-ray.

The batch is defined as the set of films stocked at the same time and bearing the same emulsion casting number without considering the format.

The sail density should not exceed 0.3. Sail density is defined as the total density (emulsion - support) of a developed, unexposed film.

On these films the following indications are marked with indelible felt:

- the emulsion casting number

- expiry date

- the density of the sail + the date.

The films are stocked in the laboratory for the duration of production.

Densitometer and viewing box verification (MC 3138)

Densitometers and viewing box are checked according to the following periodicities:

- Densitometers

The densitometer shall allow the measurement of the density of the reference density films with a measurement accuracy of ± 0.1 in direct reading or by means of a corrective (table or curve) duly identified, which is permanently attached to it.

Regardless of the routine checks performed during each film-reading campaign, the densitometer is subject to a detailed check.

This check must be carried out when the densitometer is first commissioned and every 6 months or more frequently.

The verification is carried out after thermal stabilization, using a density reference standard or a reference film.

The inspection is reported. It includes a possible adjustment of the zero of the characteristic slopes (when possible), then a reading of the displayed density/standard density characteristic for at least eight density ranges regularly scaled between 0 and 4.3 density.

If the characteristic curve deviates from more than 0.1 density of the ideal curve, the use of a curve or patch table is required.

- Reference Films - Grey Range

- Density reference standard

Film whose densities were measured by a physical measurement laboratory with uncertainty of less than or equal to 0.1 in the range of 0 to 4.2.

The validity of this standard is 5 years for careful conditions of use and preservation. The validity is extended by this same duration if an audit by a laboratory of physical measurements shows that the densities have not changed.

- Reference film

Film whose densities were measured by comparison with a density reference standard.

The reference film must be calibrated every 2 years; it must be subject to careful conditions of use and conservation.

- Density standards and reference films are used without interposition of "transparent" protection or overlay with another standard or complementary reference film.

- Viewing boxes

The viewing box is checked according to the requirements of the EN 25580 Standard, when it is commissioned and then, in a recommended periodicity between 12 and 18 months.

It must allow the reading of density images in accordance with § 8.3 from 2.7 to 4.5 approximately.

The maximum readable density must be indicated in the verification report, giving the level of density readable on the viewing box concerned.

F.7.2 Areas under examination (S7700)

Butt welds

They include the deposited metal and the base metal on both sides of the weld up to a distance from the edge of the bevel at least equal to:

10 mm for thicknesses > 30 mm

5 mm for thicknesses ≤ 30 mm

In case of repair this distance is counted from the scouring limits.

Nozzle welds

They include the deposited metal and the base metal of beveled part up to a distance from the edge of the bevel at least equal to:

10 mm for thicknesses > 30 mm (thickness of the main part)

5 mm for thicknesses ≤ 30 mm (thickness of the main part)

In case of repair this distance is counted from the scouring limits.

F.7.3 Examination of X-ray films

X-ray films must be examined in a room provided for this purpose on an adequate viewing box. The illuminated surface should be able to be reduced to the minimum necessary for examination. The luminance of the screen must be adjustable to allow a satisfactory reading of the films.

The density of the images is measured by a densitometer.

The optical density of the radiograms in the areas examined in double films must be > 2.7, but not more than 4.5.

The density variation within the useful area of the double film should be gradual, and the density difference measured at the same point on each radiogram in the imposed density zone should not exceed 0.50.

Films can be read in single film if, on the one hand, the minimum density in double film is between 2.7 and 3.5 and, on the other hand, the maximum density of some parts > 4.5.

The density of each individual radiogram must then be > 2, and each radiogram is visualized.

The ratio of thickness between the beam axis and the outer edge of a uniform thickness area should remain ≤ 1.1. The abacus below allows the evaluation of the number of exposures necessary to meet this requirement.

Assemblies with new geometric characteristics will be validated in number of exposures to ensure that 100 % examination of the welded volume under the above conditions.

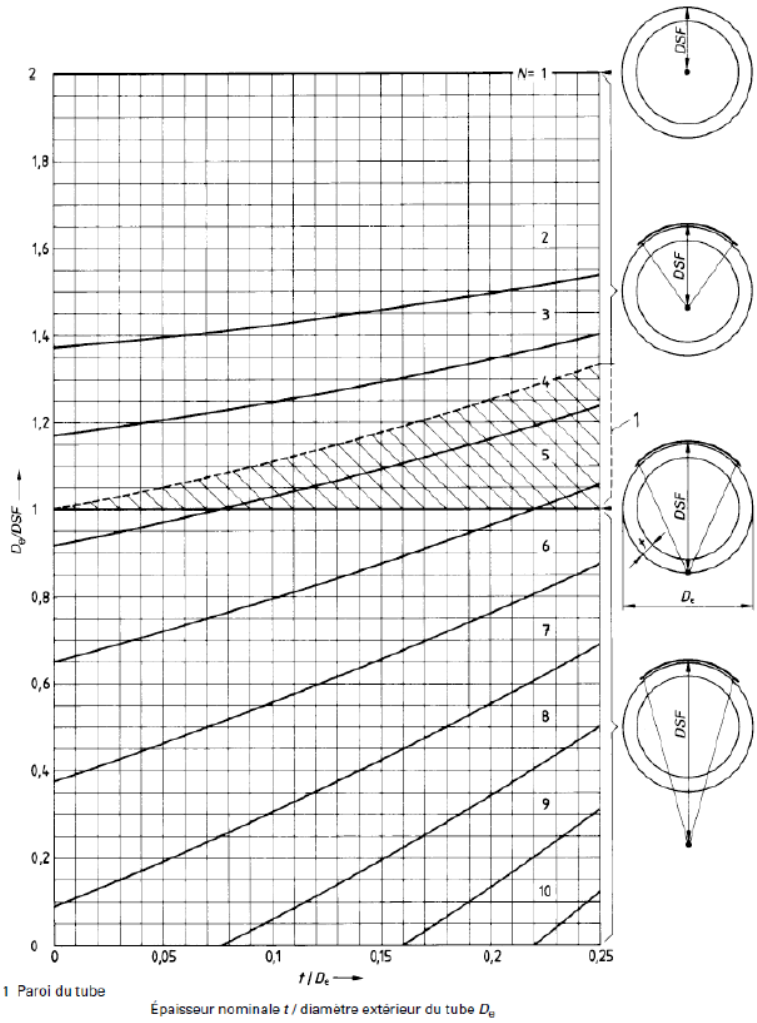

Figure A.2 : Nombre minimal d'expositions, *N*, exposition décentrée double paroi, source intérieure, augmentation maximale admissible de l'épaisseur traversée Δ *t*/*t* évaluée à 10 % pour tenir compte de l'inclinaison, en fonction des rapports t/D_e et D_e/DSF

F.7.4 Image quality

Image quality is assessed using IQI. The type of IQI and the diameter of the hole or wire to be visible are defined according to the traversed thicknesses. In the case of wire IQIs, the wire must be seen at least length 10 mm in a uniform density area, which is normally the base metal adjacent to the weld.

F.7.5 Interpretation of radiograms

The interpretation is done according to the double film technique except in cases where the upper limit of 4.5 in density cannot be respected (see §F.7.3, in this case, the reading is done in simple film under the conditions of §F.7.3, the two simple films are then examined individually. The interpretation is done zone by zone, between two consecutive landmarks.

In case of doubt during the interpretation, the weld is ground locally, and an additional radiography is made.

F.8 Criteria of acceptance of welds level 2

X-ray (S 7724.3)

The following criteria apply to strength welded joints over an extent as defined in §F.7.2.

Unacceptable are:

a) Any cracks, crazing, lack of fusion (bonding), rooting, lack of penetration and biting.

Any detected undercut during film reading shall be visually examined. The criteria for the acceptance criteria are those defined in the visual examination procedure.

b) Any blowholes with diameter greater than the smaller values of 6 mm or e/3.
c) Any alignment (or nest) of blowholes whose sum of diameters exceeds e, over a length equal to the smaller values of 12e or 150 mm.

   Two blowholes are considered to belong to the same alignment (or nest) when the distance between them is less than six times the diameter of the larger one.

d) Any isolated inclusion if its larger size (l) is greater than the given value below:

Thickness of the wall (e) in mm	**(l) in mm**
e ≤ 18	6
18 < e < 60	e / 3

e) Grouped inclusions with a sum of length more than e on a length of 12e.

   Two inclusions are considered to belong to the same grouping when the distance between them is less than six times the length of the larger one.

F.9 Extent of control and extension

Radiographic control is required on 100 % of level 2 butt welds.

F.10 Control of repaired areas

The areas repaired by adding metal are checked by radiography under the same conditions as those defined for the inspection before repair.

After repair, the films are marked according to F.6.3.

Interpretation of the repaired films shall be made by re-reading the films before repairing the defective weld.

F.11 Documentation (MC3170)

All radiographic examinations are systematically reported in the form of a report, which should include the following information:

- Identification of the manufacturer, the order, the equipment
- Identification of the part, or weld or area under examination, indicating its grade
- The designation of the examination documents used
- The stage of examination, in relation to the manufacturing operations
- The thickness of the radiographed part
- The nature and characteristics (dimensions to be considered) of the radiation source

- The type and trade name of the films
- The nature, number and thickness of screens and filters
- The type of IQIs.
- The position of the source or transmitter relative to the controlled area and the source-film distance
- The exposure times
- Film processing conditions: manual or automatic, bath temperature and development time
- The diameter of the smallest visible hole (or wire)
- The result of the interpretation of the films, with the nature and dimensions of the indications detected
- The names and qualifications of the operator and controller interpreting the films
- The Identification of the company in charge of the examination in case of subcontracting
- The date of the examination and the controller's visa.

F.12 IQI table

The image quality measured by the Q.I.s must be such that it allows good visibility of the hole or wire whose diameter is specified in the following tables:

WELDED JOINTS - GENERAL CASE (MC 3162.1.)

Thickness in mm	Hole diameter required/hole n°	Wire diameter required /wire n°
e ≤ 3	0.25 / H4	0.10 / W16
3 and ≤ 6	0.32 / H5	0.125 / W15
6 and ≤ 10	0.40 / H6	0.16 / W14
10 and ≤ 16	0.50 / H7	0.20 / W13
16 and ≤ 25	0.63 / H8	0.25 / W12
25 and ≤ 32	0.80 / H9	0.32 / W11
32 and ≤ 40	1.0 / H10	0.40 / W10
40 and ≤ 80	1.25 / H11	0.50 / W9
80 and ≤ 100	1.6 / H12	0.63 / W8

a) Case of welds of pipes or nozzles with an external diameter less than or equal to 120 mm and case of corner welds.

The image quality to be obtained with wire or hole IQI is shifted by one row towards the larger diameter wires or holes according to the table above.

b) In the case of radiographs of double-walled pipes:

- If the 2 walls are interpreted, the image quality is determined by considering the radiographed thickness equal to twice the wall thickness, and the IQI is placed on the external face of the part facing the radiation (welds made in Plan / Plan technique).
- If only one wall is interpreted, the image quality is determined by considering the radiographed thickness equal to the thickness of the interpreted wall, the values of the above table (MC 3162.1) are shifted by one row towards the holes or wires of larger diameter.

The accumulation of offsets in (a) and (b) is not permitted.

F.13 Radiographic methods

Ratio Ø/e	Circular Ø < 90	
OPERATING MODE	DESCRIPTION OF OPERATING MODE	
	Method n° 1 (plan on plan)	Method n° 2
Ø/e > 10 Source located in the plane of the weld outside the pipe	At a minimum: As many exhibitions as necessary to meet the necessary to meet the requirements of the **Note** (bottom of paragraph) source far from the pipe, with interpretation of the 2 walls in order to examine 100% of the welded volume. The density conditions defined in §F.7.3 apply to the middle of the seam for a length = 0.80Ø. If this is not possible, we can: - (1) or repeat these radiographs with different exposure times, the set of radiographs having to meet the above conditions - (2) When the density cannot be obtained by point (1), on the whole of the examination zone, the number of radiographs must be increased and the radiographs are then taken according to the radiographic methods 1A or 1B defined below **Note: The number of views must be adjusted to examine the entire welded volume under satisfactory density conditions.**	Technique reserved for OD ≥ 76 mm and ≤ 90 mm As many exposures as necessary (at least 4) are made, source in contact with the pipe 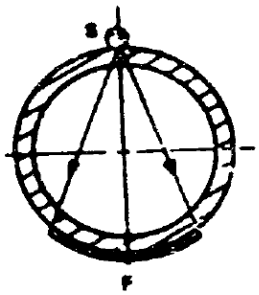
	NOTE: To satisfy the geometric Un-sharpness requirements, either method is used	

Ratio Ø/e	Circular Ø < 90	
OPERATING MODE	DESCRIPTION OF OPERATING MODE	
Ø/e ≤ 10 Source located in the plane of the weld outside the pipe	Method n° 1A (plan on plan)	Method n° 1B (plan on plan)
	As many exposures as necessary are made to meet the requirements of the Note (bottom of paragraph). The density measured in the middle of the seam over a length = 0.50 Ø must respect the conditions of §F.7.3 for each of the exposures. **Note: The number of views must be adjusted to examine the whole welded volume under satisfactory density conditions.**	Two additional radiographs are made (compared to method n° 1) at 90°, offset by 45° from the initial radiographs. The density measured in the middle of the seam over a length = 0.40 Ø must respect the conditions of §F.7.3 for each radiograph.
	Method n° 2 **Fig according to MC 3312.5.1.2.a.bis**	
	Technique reserved for OD ≥ 76 mm and ≤ 90 mm As many exposures as necessary (at least 4) are made, source in contact with the pipe 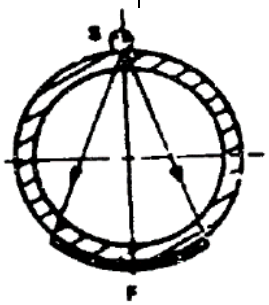 	

Ratio Ø/e	Circular Ø < 90	
OPERATING MODE	DESCRIPTION OF OPERATING MODE	
Ø /e > 10	Method n°3	Method n°4
operating mode A Elliptical projection The interpretable area determined according to §F.7.3 is limited to the value Y on the diagrams opposite.	The source is staggered from the welding plane, so that the ellipse is shown below with: 0< x ≤ 15 mm (x - distance edge to edge of seam image)	The source is placed in the same way as for method 3, but it is accepted: x = 20 mm Maxi for specific cases narrow welding seams corresponding to pipes ≤ 5 mm thick
	Fig according to MC 3312.5.1.1.b	
	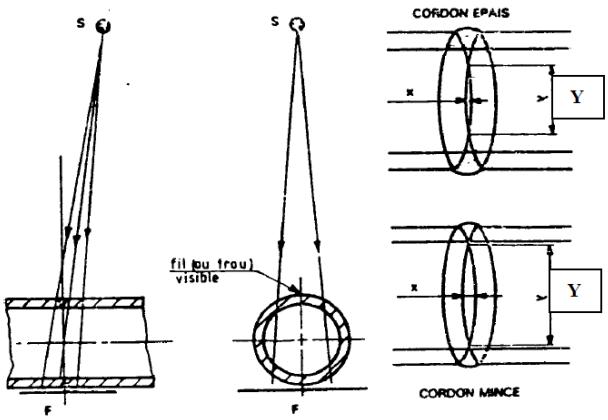	
operating mode B following the method N° 1: (plan on plan)	Same method as above but with the Source located in the plane of the weld outside the pipe	

As many views are made as necessary with optical density radiograms in accordance with §F.7.3 to allow 100 % coverage of the volume to be controlled.

Ratio Ø/e	Circular 90 < Ø ≤ 170	
OPERATING MODE	DESCRIPTION OF OPERATING MODE	
Ø/e ≤ 5 Simple wall with internal source or double wall	Method n°5	Method n°2
	If possible, the source is introduced inside the pipe and placed in contact with the inner wall of the pipe, diametrically opposed to the film. As many views as necessary are taken. **Fig according to MC 3312.5.1.2.a** 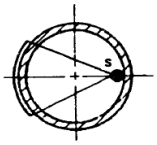	If the introduction of the source is not possible, the source is placed on the external wall of the pipe, diametrically opposed to the film in the axis of the weld or close to one of the planes of the bevel. As many views as necessary are taken (minimum 4 views). **Fig according to MC 3312.5.1.a.bis** 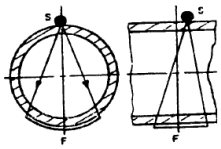
	Method n°7	Method n°6
Ø/e > 5 Panoramic or single wall with external source or double wall	If possible, the source is introduced inside the pipe, respecting the geometric unsharpeness, the source placed in the center of the pipe. **See NOTE***	The source is placed outside the pipe and the radiography is carried out in a single wall with as many exposures as necessary. **Fig according to MC 3312.5.1.2.a.ter**
	Method n°2 (above)	
	4 minimum views	
Panoramic or source outside the pipe	Pipe Ø > 170 - DESCRIPTION OF OPERATING MODE	
	Method n°5 or n°7	Method n°2
	If it is possible to insert the source inside the pipe, either directly or using an intra pipe, the source is preferably placed in the center.	If the introduction of the source is not possible, it is placed outside the pipe, in contact.

NOTE*: In the cases of panoramic exposure according to method N°7 where a phenomenon of unacceptable tilting is to be feared (strong curvature, thick cassette, etc...), it is possible to carry out the radiographs in

several panoramic exposures to obtain an overlapping allowing the reading of the totality of the circumference without risks.

FOR NOZZLE

OPERATING MODE	SET ON NOZZLE WITH COMPLETE PENETRATION DESCRIPTION OF OPERATING MODE
With outside source	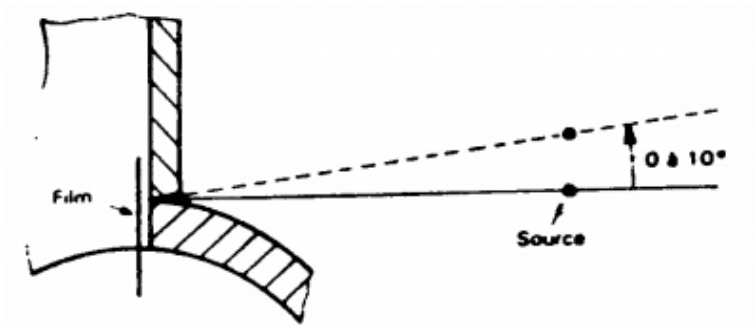
With outside or inside source One exposure if density between 2.7 / 4.5 with double film (*) If not, realize many exposures as necessary (*)	SET IN NOZZLE 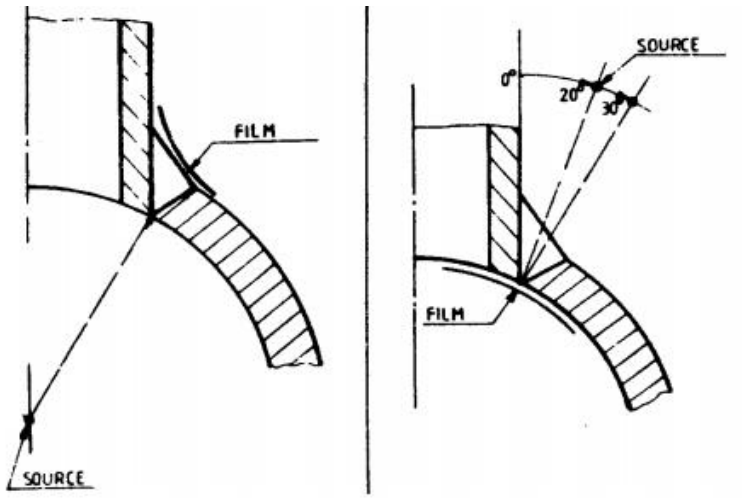

(*) or, if the conditions §F.7.3 are respected (with appropriate reading of film)

METHOD OF VIEW FOR WELDS SET IN NOZZLE (RT)

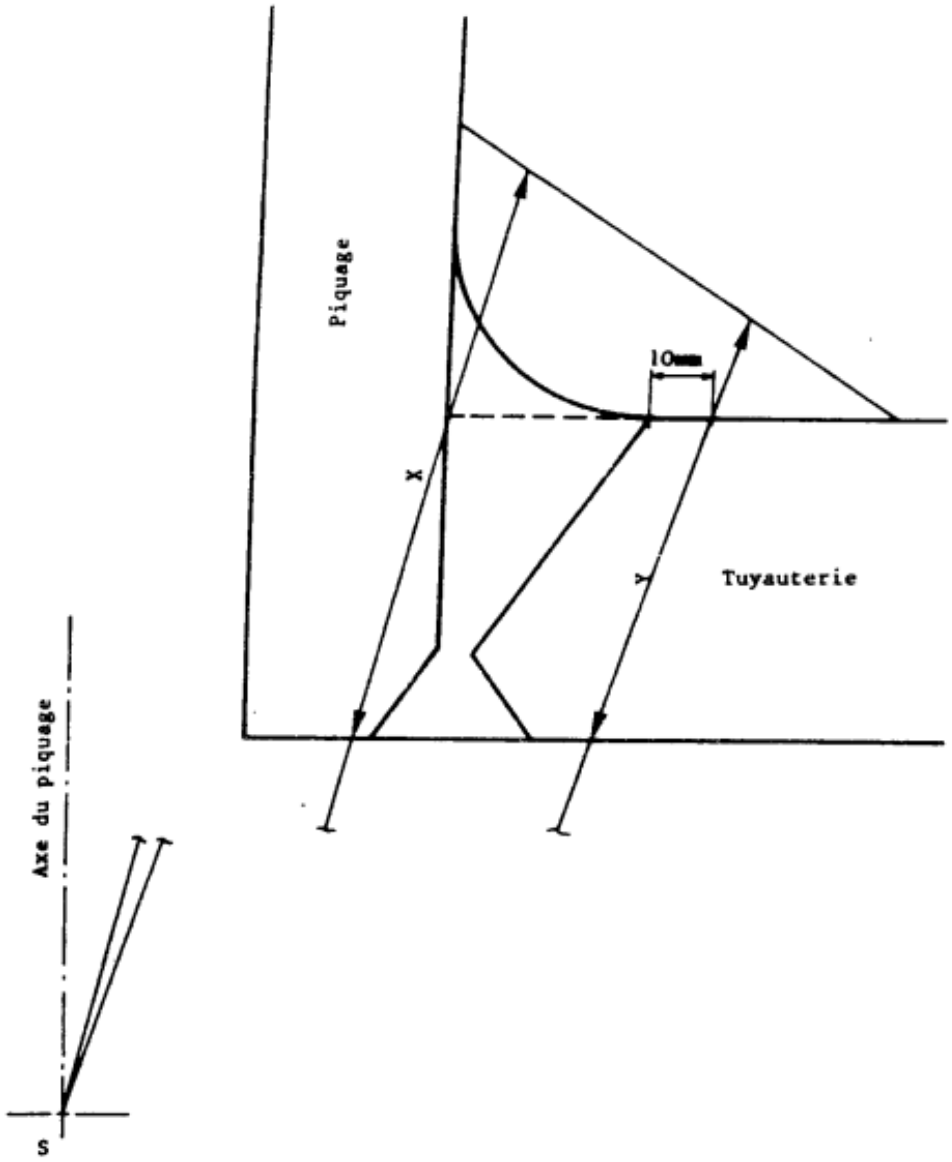

F.14 Bilingual report template

Cryogenics | Energy

fives

INTERPRETATION DE FILMS RADIOGRAPHIQUES en accord avec la procédure section 2 n°4.2.02 Rév. 6

INTERPRETATION OF RADIOGRAPHS in accordance with the procedure section 2 n°4.2.02 Rev. 6

Client *Customer*	**Type** *Type*
Ingéniérie *Engineering*	**Désignation** *Designation*
Utilisateur *User*	**N° de série** *Serial N°*
Projet *Project*	**Plan d'appareil à pression** *Pressure Vessel Drawing*
Commande *Order*	**Plan d'ensemble** *Assembly drawing*
Code Construction / Norme *Construction Code / Norm*	**ASME VIII DIV.1**

Voir détails techniques à la section 2 n°6.2.04 Annexe 1 en accord avec l'ASME V Art. 2 T-291.
/
See technique details in the section 2 n°6.2.04 Appendix 1 in accordance with the ASME V Art. 2 T-291.

Localisation des clichés / *Location of each radiograph :*
Voir plans de détail joints / *See detail drawings attached*

L: longitudinale C: circul	N° de CLICHE *PICTURE N°*	DEFAUTS RELEVES *NOTED DEFECTS*																
		SANS DEFAUTS *WITHOUT DEFECT*	MANQUE DE PENETRATION/LIAISON *LACK OF PENETRATION/JUNCTION*	SOUFFLURES *BLOWHOLES*			CANIVEAUX *UNDERCUTS*	CANIVEAUX SUR SUPPORT *UNDERCUTS ON STRIPS*	MORSURE D'ARC *ARC UNDERCUTS*	DEFAUT DE SURFACE *SURFACE DEFECT*	DEFAUT DE FILM *FILM DEFECT*	CRATERE *CRATER*	TUNGSTENE *TUNGSTEN*	A VOIR SUR PLACE *TO BE CHECKED ON*	DENSITE *DENSITY*	SENSIBILITE *SENSIBILITY*	ACCEPTE / REFUSE A *ACCEPTED* R *REFUSED*	INITIALE RADIOLOGUE *RADIOGRAPHER*
				ISOLEES *INDIVIDUAL*	ALIGNEES *IN LINE*	NIDS *NESTS*												

CLIENT et/ou TIERCE PARTIE *Client and/or Third Part*	Inspecteur autorisé ou Organisme Notifié *Authorized Inspector or Notified Body*	CONTRÔLE QUALITE FIVES CRYO *Quality Control Fives Cryo*

F.15 Lengths seen from the source

Source of radiation

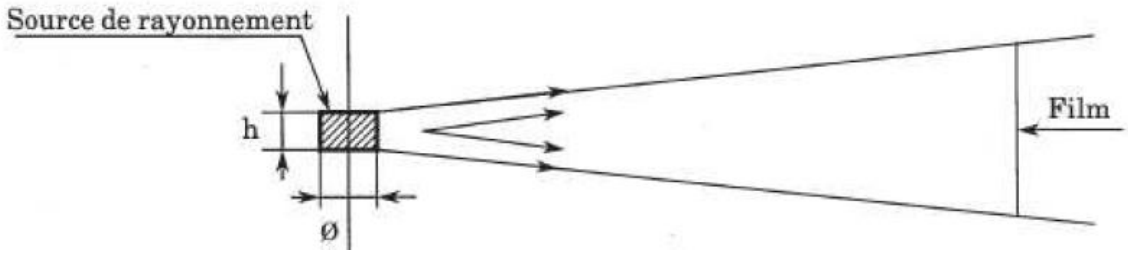

For the calculation of geometric un-sharpness, the d_{mm} dimension of the source to be considered is the height h_{mm} (source axis parallel to the plane of the film).

FIGURE MC 9220.1

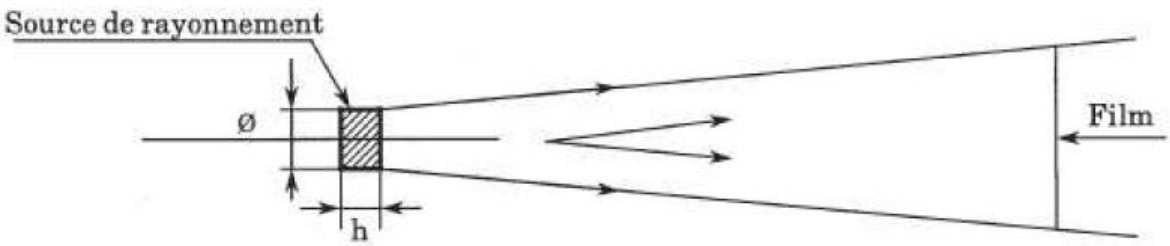

For the calculation of geometric un-sharpness, the d_{mm} dimension of the source to be considered is the diameter $Ø_{mm}$ (source axis perpendicular to the plane of the film).

FIGURE MC 9220. 2

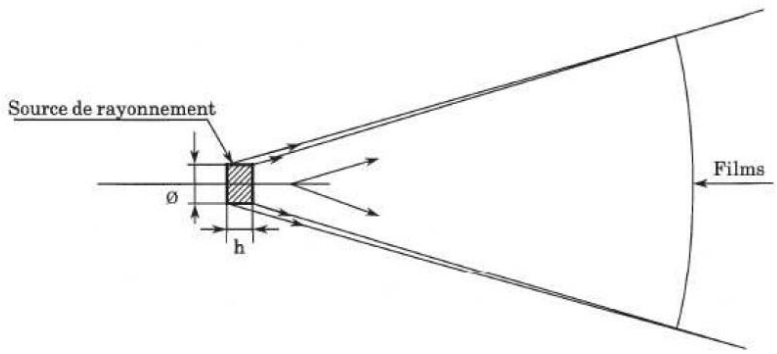

For the calculation of geometric un-sharpness, the mm dimension of the source to be considered is the largest of the two values Ømm or h_{mm}.

FIGURE MC 9220. 3

Appendix G Control of cleaning and acceptance criteria

a/ Visible surfaces

Test A Visual examination

Visual examination of surfaces with an illumination of at least 500 lux (illumination in the axis of a 100 watt lamp at 30 cm from the surface) as long as there is no glare from the operator.

Criterion 2

The metal must appear clean. Very fine oxide films (presence materialized by interfering colors) resulting from welding operations, heat treatments, etc... are acceptable. Scattered oxidation stains, including surface rust stains (formed from materials constituting or derived from contamination) are acceptable, provided that the cumulative surface of the stains is less than 0.1 % of the total surface to be considered.

Compliance with this criterion leads to the conclusion that there is no superficial ferritic contamination and stains.

Criterion 4

The metal must be free of foreign matter. A superficial and continuous adhesive film of oxides caused by short exposure to the atmosphere is acceptable.

The absence of a trace of adhesive tape or peelable varnish is checked. Acceptable discoloration due to welding is described below:

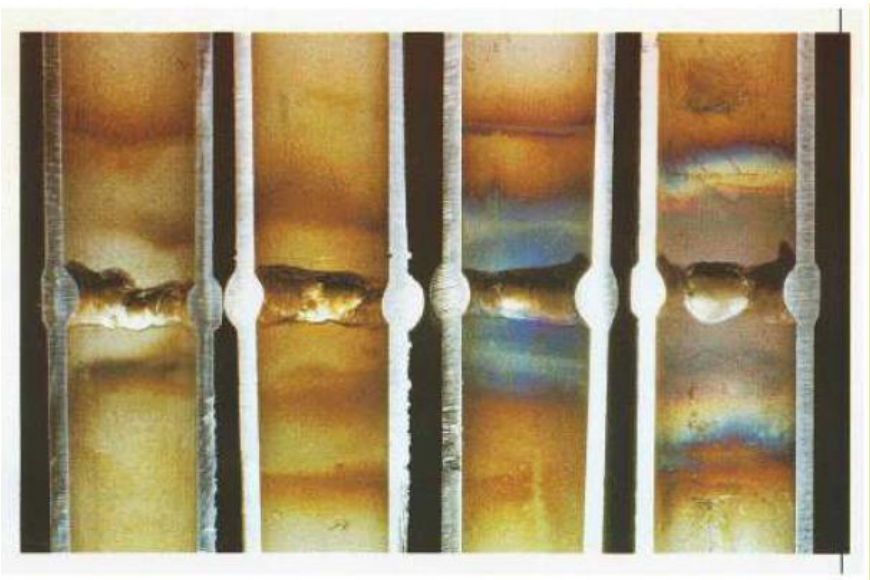

Photo 1 Photo 2 Photo 3 Photo 4

Photo 1 and 2 are acceptable (yellow to brown)

Photo 3 is still acceptable (middle blue)

Photo 4 is not acceptable (light grey)

Acceptable visual indications are:

- Water drop due to non-homogeneous surface drying
- Dark grey coloration of welded areas due to a natural preferential attack mechanism
- Grey gradient due to partial immersion during pickling
- Potential marks due to slings
- Indications not visible under a straight light of 500 lux or more

All other impurities are not acceptable: organic or non-organic impurities (such as oil, grease, marking, cleaning and machining residues and, corrosion points, indications due to excessive attack, etc.)

Test B Cloth Test

A clean, lint-free, white cloth made of non-synthetic fabric is rubbed preferably on doubtful areas

- If this operation is repeated 24 hours later, it must give the same results,
- This test can be performed, if required by the customer specification, with an acetone-soaked cloth

Criterion 6

The cloth must remain clean. Any stain is unacceptable.

b/ Nonvisible surfaces

Test F Control of rinsing water

Water flows at a speed greater than or equal to that of the operating fluid at normal speed. The collection of the last water (at least 40 l) is filtered through a bleached cotton fabric of about 90 g/m² with a mesh size of 3 to 4 threads/mm in both directions. Fabric surface must be 10 dm².

Criterion 10

The general appearance of the fabric should be that of a moist, clean fabric, marked only with a few spots (rust and dust). No particles larger than 1.0 mm shall be present except very thin or needle-shaped particles which may be up to 1.5 mm long.

There must be no apparent trace of organic impurity or unusual foreign matter (oil, abrasives, ...)

Criterion 11

The requirements are the same as for criterion 10, but abundant rust deposition on the filter is acceptable.

Test E Test of the passage of the wad

It is used to assess the cleanliness of the inside of the heat exchanger tubes or equivalent surfaces (fins). Identical to test B, the white cloth is replaced by a cotton wad moved by blowing clean, dry and undressed air.

Criterion 6

Identical to criterion 6 of test B.

Appendix H Identification of applicable texts

H.1 French Labor

H.1.1 Introduction

The labor code governs relations between the civilian employer and employees.

As such, it imposes obligations on the employer on work equipment and personal protective equipment made available to employees.

However, it does not impose any obligation on the manufacturers of this equipment, apart from the obligation to provide work equipment and personal protective equipment in accordance with the legislation in force.

These obligations stem mainly from the European New Approach directives, two of which (the "Machinery" directive 2006/42/EC and the 2016/425 (EU) regulation "Personal Protective Equipment" (PPE) are included in the French Labor Code.

H.1.2 Subjugation

The French Labor Code therefore imposes obligations on the employer to ensure hygiene, safety and favorable working conditions within his establishment. Some of these obligations may be more difficult to meet if the manufacturer of the equipment used has not taken them into account.

Thus, it is desirable, so that the equipment manufactured can be used in safety, that the manufacturers take account of these obligations.

The French Labor code has two parts:

- A legislative part (articles in L) ;
- A regulatory part comprising articles resulting from decrees in the Council of Ministers (articles in R), decrees in Council of State (articles in R) and simple decrees (articles in D).

The plan is identical for each of the two parts, i.e. 8 parts:

Part 1: Individual work relationships

Part two: Collective labor relations

Third part: Hours of work, salary, profit-sharing, participation, employee savings.

Part 4: Occupational health and safety

Part 5: Employment

Part Six: Lifelong vocational training

Part 7: Provisions specific to certain professions and activities[2]

Part Eight: Control of labor legislation, fight against illegal work

[2] This part concerns the following professions: professional journalist, entertainment, advertising and fashion profession; janitor and employee of apartment buildings, domestic and personal service employees; travelers, representative or salesperson, branch manager and salaried spouse of the entrepreneur; homeworker.

Thus, only the fourth part of the regulatory part contains requirements that can impact the manufacture of equipment.

The fourth part is organized according to the following books :

- Book I “General provisions”
- Book II “Workplaces”
- Book III “Work equipment”
- Book IV "Risks of exposure"
- Book V "Activities or operations"
- Book VI “Institutions and prevention organizations”
- Book VII “Control”
- Book VIII "Overseas provisions".

Books I, II, III, IV and V include requirements for work equipment and personal protective equipment.

- Book I “General provisions”
    - Title I "Scope and provisions of application"
    - Title II “General principles of prevention”
    - Title III "Alert and withdrawal rights"
    - Title IV "Information and training of workers"
    - Title V "Special provisions for certain categories of workers"
    - Title VI "Provisions relating to the prevention of the effects of exposure to certain occupational risk factors and to the professional prevention account"

Books I, II, III, IV and V include requirements for work equipment and personal protective equipment.

- Book I “General provisions”
    - Title I "Scope and provisions of application"
    - Title II “General principles of prevention”
    - Title III "Alert and withdrawal rights"
    - Title IV "Information and training of workers"
    - Title V "Special provisions for certain categories of workers"
- Book II “Provisions applicable to workplaces”
    - Title I "Obligations of the contracting authority for the design of workplaces"
    - Title II "Obligations of the employer for the use of the workplace"
- Book III “Work equipment and means of protection”
    - Title I “Design and placing on the market of work equipment and means of protection”
    - Title II "Use of work equipment and means of protection"
- Book IV "Prevention of certain risks of exposure"
    - Title I "Chemical risks"
    - Title II "Biological risks"
    - Title III "Prevention of risks of exposure to noise"
    - Title IV "Prevention of risks of exposure to mechanical vibrations"
    - Title V "Prevention of risks of exposure to radiation"
    - Title VI “Other risks” [3]

[3] This title only includes the chapter:
- Chapter I: Risk prevention in a hyperbaric environment

- Book V “Prevention of risks linked to certain activities or operations”
  - Title I "Work carried out in an establishment by an external company"
  - Title II "Basic nuclear installations and installations likely to give rise to public utility easements"
  - Title III "Building and civil engineering"
  - Title IV "Other activities or operations" [4]

In addition, the legislative part does not include any technical requirement concerning work equipment and personal protective equipment.

Table 51: Applicability of French Labor Code for Project sCO2-4-NPP

4th part of the French labor code			
Book	**Title**	**Chapter (s)**	**Applicability sCO2-4-NPP**
Book I "General provisions"	Title II "General principles of prevention"	Chapter I : Obligations of the employer	**X**
	Title VI "Provisions relating to the prevention of the effects of exposure to certain occupational risk factors and to the professional prevention account"	Chapter I : Exposure prevention sheet (in particular for exposure to risks linked to handling, chemicals and noise)	**X**
Book II "Provisions applicable to workplaces"	Title II "Obligations of the employer for the use of the workplace"	Chapter I: General provisions	**X**
		Chapter II: Aeration, sanitation	**X**
		Chapter III: Lighting, thermal atmosphere	**X**
		Chapter IV: Safety in the workplace Section 5 Signs and materialization relating to health and safety (Articles 4224-20 to R4224-24)	**X**
		Chapter V: Organization of workstations	**X**
		Chapter VI: Electrical installations[5]	**X**
		Chapter VII: Risk of fire and explosion and evacuation	**X**
		Chapter VIII: Sanitary facilities, catering and accommodation	**No**
Book III "Work equipment and means of protection"	Title I "Design and placing on the market of work equipment and means of protection"	Chapter I: General rules	**X**
		Chapter II: Technical design rules	**X**
		Chapter III: Conformity certification procedures	**X**
		Chapter IV: Backup procedure	**X**

[4] This title includes chapters:
- Chapter I: Handling of loads
- Chapter II: Use of display screens
- Chapter III: Interventions on elevating and permanently installed equipment
- Chapter IV: Operations on electrical installations or in their vicinity

[5] These requirements apply to permanent and temporary electrical installations in premises and not to vehicles

4th part of the French labor code			
Book	**Title**	**Chapter (s)**	**Applicability sCO2-4-NPP**
		Appendix I to article R4312-1[6]	**X**
	Title II "Use of work equipment and protective means"	Chapter I: General rules	**X**
		Chapter II: Maintaining compliance	**X**
		Chapter III: Organizational measures and conditions of use of work equipment and personal protective equipment	**X**
		Chapter IV: Use of work equipment not subject to design rules when they are first placed on the market	**X**
Book IV "Prevention of certain risks of exposure"	Title I "Chemical risks"	Chapter I: Placing on the market of substances and preparations	**No**
		Chapter II: Measures to prevent chemical risks	**No**
	Title II "Prevention of biological risks"	Chapter I: General provisions	**No**
		Chapter II: Principles of prevention	**No**
		Chapter III: Risk assessment	**No**
		Chapter IV: Measures and means of prevention	**No**
		Chapter V: Information and training of workers	**No**
		Chapter VI: Medical surveillance	**No**
		Chapter VII: Administrative declaration	**No**
	Title III "Prevention of risks of exposure to noise"	Chapter I: General provisions	**X**
		Chapter II: Principles of prevention	**X**
		Chapter III: Risk assessment	X
		Chapter IV: Measures and means of prevention	**X**
		Chapter V: Medical surveillance	**No**
		Chapter VI: Information and training of workers	**X**
		Chapter VII: Derogatory provisions	**No**
	Title IV "Prevention of risks of exposure to mechanical vibrations"	Chapter I: General provisions	**X**
		Chapter II: Principles of prevention	**X**
		Chapter III: Exposure limit values	X

[6] This Appendix sets requirements for machines or partly completed machinery

4th part of the French labor code			
Book	**Title**	**Chapter (s)**	**Applicability sCO2-4-NPP**
		Chapter IV: Risk assessment	**X**
		Chapter V: Measures and means of prevention	**X**
		Chapter VI: Medical surveillance	**X**
		Chapter VII: Information and training of workers	X
	Title V "Prevention of risks of exposure to radiation"	Chapter I: Prevention of risks of exposure to ionizing radiation	**No**
		Chapter II: Prevention of risks of exposure to artificial optical radiation	**No**
		Chapter III: Prevention of risks of exposure to electromagnetic fields	**X**
	Title VI "Other risks"	Chapter I: Risk prevention in a hyperbaric environment	**No**
		Chapter II: Prevention of pyrotechnic risk[7]	**No**
Book V: Prevention of risks linked to certain activities or operations	Title IV: "Other activities and operations"	Chapter I: Handling of loads	**X**
		Chapter II: Use of display screens	**X**
		Chapter III: Interventions on lifting and permanently installed equipment	**No**
		Chapter IV: Operations on electrical installations or in their vicinity	**X**

H.2 Specific French regulations

H.2.1 Introduction

In addition to the labor code, it is also a question of ensuring that specific French regulations do not introduce specific requirements.

H.2.2 Work equipment

After analysis, it turns out that a technical guide relating to the modification operations of the machines in service should be taken into account. Although it is intended for users, it seems judicious to extract from it the requirements for the evolutions (modifications) of the work equipment by the manufacturers.

[7] Concerns the following pyrotechnic activities: The manufacture, study, experimentation, control, conditioning, preservation, destruction of explosive substances or objects intended to be used for the effects of their explosion or for pyrotechnic purposes , the demolition or dismantling of pyrotechnic equipment or buildings.

Table 52: French Regulation on Work Equipment

French regulations	Publication and year	Applicability sCO2-4-NPP
Technical guide of November 18, 2014 relating to the modification operations of machines in service	OB n° 11/2014 of November 30, 2014	**No**
Analysis: This guide is not applicable to the Project sCO2-4-NPP		

H.3 French Environment Code

H.3.1 Introduction

The Environment Code imposes obligations notably on the user of equipment, but also on the manufacturers of this equipment in order to preserve the environment.

H.3.2 Subjugation

Some of the user's obligations may be more difficult to meet if the manufacturer of the equipment used has not taken them into account.

It is therefore desirable, so that the equipment manufactured can be used in compliance with this code, that manufacturers take these obligations into account.

The Environment Code has two parts:

- Législative A legislative part;
- A regulatory part.

Each of these parts is organized into books according to the scheme:

- Book I: Common provisions;
- Book II: Physical environments;
- Book III: Natural spaces;
- Book IV: Natural heritage and flora;
- Book V: Prevention of pollution, risks and nuisances;
- Book V: Provisions applicable in New Caledonia, French Polynesia, Wallis and Futuna, in French southern and Antarctic lands and in Mayotte;
- Book VII: Environmental Protection in Antarctica.

Thus, only books II and V contain requirements that can impact the manufacturing of equipment and their process.

Book II is organized according to the following titles:

- Title I: Water and aquatic and marine environments;
- Title II: Air and atmosphere.

Only Title II includes requirements which may impact the manufacture of the equipment constituting the Project sCO2-4-NPP.

The chapters of Title II are:

Chapter I: Air quality monitoring and public information;

Chapter II: Planning;

Chapter III: Emergency measures;

Chapter IV: National technical measures for the prevention of air pollution and the rational use of energy;

Chapter V: Financial and fiscal provisions;

Chapter VI: Controls and sanctions;

Chapter VII: Special provisions for pollution caused by radioactive substances;

Chapter VIII: Miscellaneous provisions;

Chapter IX: Greenhouse effect

Book V is organized according to the following titles:

- Preliminary title: Higher Council for the Prevention of Technological Risks;
- Title I: Installations classified for the protection of the Environment;
- Title II: Chemicals, biocides and substances in nanoparticulate state;
- Title III: Genetically Modified Organisms (GMOs);
- Title IV: Waste;
- Title V: Special provisions for certain works or certain installations;
- Title VI: Prevention of natural risks;
- Title VII: Prevention of noise pollution;
- Title VIII: Protection of the living environment;
- Title IX: Nuclear security and basic nuclear installations.

Only Titles II, IV, VII[8] include requirements that can impact the manufacturing of equipment and their process.

The chapters of Title II are:

- Chapter I: Control of chemicals;
- Chapter II: Approval of active biocidal substances and authorization to make biocidal products available on the market;
- Chapter III: Provisions common to chemicals and biocides;
- Chapter IV: Prevention of risks to health and the environment resulting from exposure to substances in nanoparticulate state;

[8] The requirements of Title VII of Book V relate to the following equipment :

- Machines, materials, machines and devices used or likely to be used in industrial, craft, commercial, agricultural, service, leisure activities, such as machines used or intended to be used on construction sites, public or no, machinery and equipment intended for the maintenance of roads, public spaces and green spaces, maintenance and cleaning appliances, appliances for preparing and preserving food or agricultural products, production or distribution of calories and frigories, packaging apparatus, office materials and equipment;
- Gardening, DIY materials and appliances and household appliances;
- Sound devices for the protection of property and people, in particular alarm devices;
- Silencers and exhaust systems for machines and vehicles and for cowlings and soundproofing systems for machinery and equipment.

- Chapters I, II and III contain a priori requirements that must be respected by the manufacturers.

The chapters of Title IV are:

- Chapter I: General provisions relating to the prevention and management of waste;
- Chapter II: Special provisions for the sustainable management of radioactive materials and waste;
- Chapter III: Provisions specific to certain categories of products and waste (R)[9].

Chapter II does not contain requirements to be met by a manufacturer of non-radioactive equipment.

Chapters I and III contain a priori requirements to be respected by the manufacturers.

The chapters of Title VII are:

- Chapter I: Noise control
- Chapter II: Assessment, prevention and reduction of environmental noise

In addition, the legislative part does not include any technical requirement.

Consequently, only the following chapters of book V of the Environment Code, regulatory part, were taken into account in the context of this study:

- Chapters I and III of Title II;
- Chapters I and III of Title IV.

Table 53: Synthesis and applicability of French Environment Code for Project sCO2-4-NPP

Book	Title	Chapter	Applicability sCO2-4-NPP
Book II: Physical environments	Title I: Water and aquatic and marine environments		**No**
	Title II: Air and atmosphere		**No**

[9] Chapter III of title IV of book V concerns:

- Section 1: Waste from care activities and similar
- Section 2: Operational waste and cargo residues from ships
- Section 3: Waste oils
- Section 4: So-called "PCB" substances
- Section 5: Packaging
- Section 6: Refrigerants used in refrigeration and climatic equipment
- Section 7: Batteries and accumulators
- Section 8: Used tires
- Section 9: Vehicles
- Section 10: Electrical and electronic equipment
- Section 11: Waste printed paper and paper for graphic use intended for printing
- Section 12: Waste textile clothing, footwear or household linen
- Section 13: Biowaste
- Section 14: Household waste from chemicals which may pose a significant risk to health and the environment
- Section 15: Waste from furniture elements
- Section 16: Refillable gas bottles for individual use and waste gas bottles
- Section 17: Ship recycling
- Section 18: Waste paper, metal, plastic, glass and wood
- Section 19: Waste from construction materials, products and equipment
- Section 20: Methanisation of non-hazardous waste or raw vegetable matter
- Section 21: Plastic products whose abandonment is likely to generate land and marine waste
- Section 22: Waste from pleasure or sport boats
- Section 23: Unsold food products

Book	Title	Chapter	Applicability sCO2-4-NPP
Book V: Prevention of pollution, risks and nuisances	Title II: Chemicals, biocides and nanoparticulate substances	Chapter I: Control of chemicals	**X**
		Chapter II: Approval of active biocidal substances and authorization to make biocidal products available on the market	**No**
		Chapter III: Provisions common to chemicals and biocides	**X**
		Chapter IV: Prevention of risks to health and the environment resulting from exposure to substances in nanoparticulate state	**No**
	Title IV: Waste	Chapter I: General provisions relating to waste disposal	**X**
		Chapter II: Special provisions for the sustainable management of radioactive materials and waste	**X**
		Chapter III: Provisions specific to certain categories of products and waste (R)	**X**
	Title VII: Prevention of noise pollution	Chapter I: Noise control	**No**
		Chapter II: Assessment, prevention and reduction of environmental noise	**No**

H.4 European directives / regulations ‘‘personal safety’’

H.4.1 Presentation

European regulations concerning personal safety are divided into 2 categories:

- European directives / regulations requesting CE marking (see § H.4.2) ;
  - For this regulation directly applicable to equipment manufacturers: these are European directives or regulations requesting CE marking (for example: machinery directive 2006/42 /EC, personal protective equipment regulation 2016/425, etc.).
- European User Directives, in the employer sense (see § H.4.3) ;
  - These are the specific directives issued under Directive 89/391/EEC on the implementation of measures to encourage improvements in the safety and health of workers at work. These directives are not directly applicable to manufacturers. However, if some of their requirements are not taken into account, the user of this equipment may not be able to put it into service. Furthermore, the requirements of these directives have been transposed into French law in the Labor Code. It should be clarified that Directive 89/391/EEC specifies that it is not applicable (and therefore the specific directives which result from it) when the peculiarities inherent in certain specific activities in the public service, for example in the armed forces or the police, or certain specific activities in the civil protection services, object to it in a binding manner. In this case, care should be taken to ensure that the safety and health of workers is ensured, as far as possible, taking into account the objectives of the said Directive.

In addition, taking into account that the Labor Code must be taken into account, the applicability of all these regulations is envisaged. However, only the requirements that can be treated by a manufacturer are considered (for example, certain texts require the establishment of medical monitoring; however, this medical monitoring cannot be implemented by the manufacturer).

The directives for these 2 categories have been studied in depth.

The case of the French Labor Code is treated in a particular way, because the requirements it contains with regard to the security of persons, are often the transposition into French law of European user directives. Thus, only the specific requirements are treated, a correspondence matrix being provided for the others.

H.4.2 European directives / regulation requesting CE marking

Directives or regulations requesting CE marking before specific study for Project sCO2-4-NPP are:

Table 54: Applicability of European directives on personal safety for Project sCO2-4-NPP

New approach directives / regulations requesting CE marking	**Reference** amendment	**Applicable directives / regulations sCO2-4-NPP**
Simple pressure vessels directive	**2014/29/UE**	**No**
Analysis: Project sCO2-4-NPP does not include simple pressure vessels.		
Pressure Equipment Directive (PED)	**2014/68/UE**	**Yes**
Analysis Project sCO2-4-NPP include pressure equipment.		
Electromagnetic Compatibility directive (EMC)	**2014/30/UE**	**Yes**
Analysis: Project sCO2-4-NPP includes a power supply and electrical components which can generate disturbances related to electromagnetic compatibility.		
Low voltage directive	**2014/35/UE**	**Yes** **See note of analysis**
Analysis: Project sCO2-4-NPP includes electrical components or equipment supplied with low voltage (between 50 VAC and 1000 VAC and 75 VDC and 1500 VDC). **NOTE**: If the machinery directive is applicable, the requirements relating to the low voltage directive are taken into account by point 1.5.1 "Electricity supply" in Appendix I of the machinery directive		
Radio Electric Equipment Directive (RED) [10]	**2014/53/UE** 11	**No**
Analysis: Project sCO2-4-NPP does not include Radio Electric Equipment		
Directive for Equipment and protective systems intended for use in potentially explosive atmospheres	**2014/34/UE**	**No**

[10] This Directive 2014/53/EU does not apply to radio equipment used exclusively in the context of activities relating to public security, defense or state security, including economic well-being of the State when the activities relate to the security of the State, or to the activities of the State in the field of criminal law.

[11] Definition "radio equipment" within the meaning of Directive 2014/53/EU: Electric or electronic product which intentionally emits and / or receives radio waves for radiocommunication and / or radiodetermination purposes, or an electric or electronic product which must be completed an accessory, such as an antenna, for intentionally transmitting and / or receiving radio waves for radiocommunication and / or radiodetermination purposes.

New approach directives / regulations requesting CE marking	Reference amendment	Applicable directives / regulations sCO2-4-NPP
Analysis: Project sCO2-4-NPP does not include devices or equipment that are intended to be used in an explosive atmosphere.		
Machinery directive[12] [13]	**2006/42/CE** 2009/127/CE 2014/33/UE 2019/1243/UE Regulations 596/2009 167/2013 2019/1243	**Yes**
Analysis: Project sCO2-4-NPP include devices or equipment must be considered as a machine because this equipment has an electrical supply, an electrical actuator and a control system		
Regulations (EU) Personal Protective Equipment (PPE)	**2016/425**	**No**
Analysis: Project sCO2-4-NPP does not include the supply of PPE by the company BH-NP		

[12] « Machinery » : a set of parts or components linked together, at least one of which is movable and, where appropriate, actuators, control and power circuits, etc. joined together for a defined application, in particular for the transformation, treatment, movement and packaging of a material;

- a set of machines which, in order to contribute to the same result, are arranged and controlled so as to be integral in their operation;

- interchangeable equipment modifying the function of a machine, which is placed on the market with the aim of being assembled to a different machine or series of machines or to a tractor by the operator himself, to the extent where this equipment is not a replacement part or a tool;

"Safety component": a component, provided that it is not interchangeable equipment, which the manufacturer, or his authorized representative established in the Community, places on the market with the aim of ensuring, by its use, safety function, the failure or malfunction of which jeopardizes the safety or health of exposed persons.

[13] «quasi-machine»: assembly which almost constitutes a machine, but which cannot by itself ensure a defined application. A drive system is a quasi-machine. The partly completed machinery is only intended to be incorporated into or assembled with other machinery or other partly completed machinery or equipment with a view to constituting a machine to which this Directive applies.

New approach directives / regulations requesting CE marking	Reference amendment	Applicable directives / regulations sCO2-4-NPP
Toy Directive	**2009/48/CE** 2012/7/UE 2014/79/UE 2014/81/UE 2014/84/UE 2015/2115UE 2015/2116UE 2015/2117UE 2017/738/UE 2017/774/UE 2017/898 2018/725/UE Regulations 681/2013	**No**
Analysis: Project sCO2-4-NPP is not and does not include toys		
Non-automatic weighing instruments directive	**2014/31/UE**	**No**
Analysis: Project sCO2-4-NPP is not and does not include non-automatic weighing instruments		
Regulation (EU) on medical devices	**2017/745** Règlement 2020/561	**No**
Analysis: Project sCO2-4-NPP is not and does not include active implantable medical devices		
Regulation (EU) concerning appliances burning gaseous fuels	**2016/426**	**No**
Analysis: Project sCO2-4-NPP is not and does not include appliances burning gaseous fuels		

New approach directives / regulations requesting CE marking	Reference amendment	Applicable directives / regulations sCO2-4-NPP
Directive for efficiency requirements for new hot-water boilers fired with liquid or gaseous fuels	**92/42/CE** 93/68/CEE 2004/8/CE 2005/32/CE 2008/28/CE Regulations 813/2013	**No**
Analysis: Project sCO2-4-NPP is not and does not include boiler		
Directive relating to the making available on the market and supervision of explosives for civil uses	**2014/28/UE**	**No**
Analysis: Project sCO2-4-NPP is not and does not include explosives for civil uses		
Directive on the making available on the market of pyrotechnic articles	**2013/29/UE**	**No**
Analysis: Project sCO2-4-NPP is not and does not include pyrotechnic articles		
Directive on recreational craft and personal watercraft	**2013/53/UE**	**No**
Analysis: Project sCO2-4-NPP is not and does not include recreational craft and personal watercraft		
Directive to lifts and safety components for lifts	**2014/33/UE**	**No**
Analysis: Project sCO2-4-NPP is not and does not include lifts and safety components for lifts		
Directive on in vitro diagnostic medical devices	**98/79/CE** 2011/100/CE Regulations 1882/2003 596/2009	**No**
Analysis: Project sCO2-4-NPP is not and does not include in vitro diagnostic medical devices		
Règlement (UE) on cableway installations	**2016/424**	**No**
Analysis: Project sCO2-4-NPP is not and does not include cableway installations		
Directive on the making available on the market of measuring instruments	**2014/32/UE** 2015/13/UE	**No**
Analysis: Project sCO2-4-NPP is not and does not include measuring instruments		

Special cases of construction products

Since July 1, 2013, the rules for affixing the CE marking to construction products are specified in Articles 8 (general principles and use of the CE marking) and 9 (rules and conditions for affixing the CE marking) of the EU regulation 305/2011.

Table 55: Construction product regulation EU

Construction product regulation	**Reference** amendment	**Applicability sCO2-4-NPP**
Regulation (EU) for conditions for the marketing of construction products	**305/2011** 568/2014 574/2014	**No**
Analysis: Project sCO2-4-NPP is not and does not include construction products		

Special cases of RoHS directives and eco-design

It should be recalled that although not included in the analysis of the previous CE marking directives, the RoHS directives 2011/65/EU and eco-design 2009/125/EC are well analyzed in this standard. This analysis is transcribed in 8.6 "European directives / regulations on the environment".

If indeed the RoHS directive requires CE marking, these are requirements mainly concerning the restriction of certain substances for IAS in addition to the aspects of human exposure. In addition, there is a strong requirement for the environmentally sound recovery and disposal of EEE waste. This is why, it seems fairer to make it appear to the requirements related to the environment and in connection with the WEEE directive 2012/19/EU.

For the ecodesign directive 2009/125/EC, the analysis is different. Indeed, it does not appear in the lists of directives or regulations imposing marking (for example the list of the General Direction of Enterprises, undoubtedly compared to recital 2312 of the directive which indicates that the products should bear the CE marking. However, there is ambiguity with article 5 of the directive which indicates:

"Before the placing on the market and / or putting into service of a product covered by implementing measures, a CE marking is affixed and a CE declaration of conformity is issued by which the manufacturer or his authorized representative ensures and declares that the product complies with all the relevant provisions of the applicable implementing measure”.

This is why we have integrated the ecodesign directive into directives and regulations relating to the environment. This allows us to specify that if a product depends on an execution measure as defined in article 15 of the eco-design directive, it is generally linked to the CE marking.

Synthesis

After study, the following CE marking directives are applicable to sCO2-4-NPP:

Table 56: CE marking directives

CE marking directives	
Pressure Equipment Directive (PED)	**2014/68/UE**
Low voltage directive	**2014/35/UE**

CE marking directives	
Machinery directive	**2006/42/EC**
Electromagnetic Compatibility (EMC) Directive	**2014/30/EU**

H.4.3 European User Directives, in the employer sense

User directives, in the employer sense, containing requirements are taken into account, they can be applicable to at least a subset of the sCO2-4-NPP Transportable DGA, these are:

Table 57: Applicability of European User Directives for Project sCO2-4-NPP

User directives	**Reference** amendment	**Applicability sCO2-4-NPP**
Directive on minimum safety and health requirements for the use by workers at work of work equipment	**2009/104/CE**	**Yes**
Analysis: For our study, the sCO2-4-NPP Transportable DGA is considered to be work equipment		
Directive on minimum safety and health requirements for the use by workers at work of work equipment	**90/269/CEE** 2007/30/CE	**Yes**
Analysis: sCO2-4-NPP requires handling for use and maintenance		
Directive on the minimum requirements for the provision of safety and/or health signs at work	**92/58/CEE** 2007/30/CE 2014/27/UE Règlement (UE) 2019/1243	**Yes**
Analysis: sCO2-4-NPP will have pictograms and warnings		
Directive on the protection of the health and safety of workers from the risks related to chemical agents at work	**98/24/CE** 2007/30/CE 2014/27/UE Règlement (UE) 2019/1243	**Yes**
Analysis: sCO2-4-NPP may possibly contain chemical agents		
Directive on minimum requirements for improving the safety and health protection of workers potentially at risk from explosive atmospheres	**1999/92/CE** 2007/30/CE	**No**
Analysis: sCO2-4-NPP is not used in explosive atmospheres within the meaning of the directive		

User directives	Reference amendment	Applicability sCO2-4-NPP
Directive on the minimum health and safety requirements regarding the exposure of workers to the risks arising from physical agents (vibrations)	**2002/44/CE** 2007/30/CE Règlement 1137/2008 Règlement (UE) 2019/1243	**Yes**
Analysis: sCO2-4-NPP can expose users to vibrations		
Directive on the minimum health and safety requirements regarding the exposure of workers to the risks arising from physical agents (noise)	**2003/10/CE** 2007/30/CE Règlement (UE) 1137/2008 2019/1243	**Yes**
Analysis: sCO2-4-NPP ay possibly expose operators to noise.		
Directive on the protection of workers from the risks related to exposure to carcinogens or mutagens at work	**2004/37/CE** 2014/27/UE 2017/2398/UE2019/130/UE 2019/983/UE Règlement (UE) 2019/1243	**Yes**
Analysis: sCO2-4-NPP may possibly contain carcinogens or mutagens		
Directive on the protection of workers from risks related to exposure to biological agents at work	**2000/54/CE**	**No**
Analysis: sCO2-4-NPP does not contain biological agents within the meaning of the directive.		
Directive on the minimum health and safety requirements regarding the exposure of workers to the risks arising from physical agents (electromagnetic fields)	**2013/35/UE**	**Yes**
Analysis: sCO2-4-NPP can expose operators to electromagnetic fields		

User directives	Reference amendment	Applicability sCO2-4-NPP
Directive on the minimum health and safety requirements regarding the exposure of workers to risks arising from physical agents (artificial optical radiation[14])	**2006/25/CE**[15] 2007/30/CE 2013/64/UE Règlement (UE) 1137/2008 2019/1243	**No**
Analysis: sCO2-4-NPPT cannot generate IR and laser radiation which could expose operators		
Directive on the minimum safety and health requirements for work with display screen equipment	**90/270/CEE** 2007/30/CE	**Yes**
Analysis: sCO2-4-NPP may possibly include display screen equipment		
Directive concerning the minimum safety and health requirements for the workplace[16]	**89/654/CEE** 2007/30/CE Règlement (UE) 2019/1243	**No**
Analysis: sCO2-4-NPP is not a workplace within the meaning of the directive		
Regulation of the European Parliament and of the Council of 9 March 2016 on personal protective equipment	**2016/425**	**No**
Analysis: This directive only applies to the user and does not include any additional requirements to Directive 89/686 / EEC as amended for manufacturers of PPE		

[14] "Optical radiation": all electromagnetic radiation with a wavelength between 100 nm and 1 mm. The spectrum of optical radiation is subdivided into ultraviolet radiation, visible radiation and infrared radiation.

The risks linked to the use of laser sources are, with regard to the prescriptions applicable to the manufacturer within the framework of the equipment and their support means, included in the standards NF EN60950-1: 2006 “Information processing equipment - Safety - Part 1: general requirements ”(see paragraph 4.3.13.5 of this standard) and NF EN61010-1: 2001“ Safety rules for electrical measuring, regulation and laboratory devices - Part 1: general requirements ”(see paragraph 12.6 of this standard). These 2 standards refer to NF EN60825-1: 2008 or the 1994 version (+ corrigendum February 1995) + A1: 2002 + A2: 2001 (+ corrigendum April 2004) "Safety of laser devices - Part 1: Classification of equipment and requirements "

[15] Directive 89/654 / EEC defines workplaces as places intended to include workstations, located in the buildings of the enterprise and / or establishment, including any other place in the area of the company and / or establishment to which the worker has access in the context of his work. Workplaces inside means of transport are excluded.

[16] For the purposes of this Directive, the following definitions apply:

Vessel: any vessel flying the flag of a Member State or registered under the full jurisdiction of a Member State, capable of sailing at sea or practicing fishing in estuaries, of public or private property, excluding:

- river navigation,
- warships,
- pleasure craft operated for non-commercial purposes without professional crew, and
- tugs sailing in port areas.

User directives	Reference amendment	Applicability sCO2-4-NPP
Directive supplementing the measures to encourage improvements in the safety and health at work of workers with a fixed-duration employment relationship or a temporary employment relationship	**91/383/CEE** 2007/30/CE 2019/1834/UE Règlement (UE) 2019/1243	**No**
Analysis: This directive is intended for companies in the context of permanent work.		
Directive on the minimum safety and health requirements for improved medical treatment on board vessels[17]	**92/29/CE** 2007/30/CE 2019/34/UE Règlement (UE) 1882/2003 1137/2008 2019/1243	**No**
Analysis: This directive it applies to seagoing ships.		
Directive on the implementation of minimum safety and health requirements at temporary or mobile constructions sites	**92/57/CE** 2007/30/CE Règlement (UE) 2019/1243	**No**
Analysis: Project sCO2-4-NPP is not used on temporary or mobile sites as defined by the directive.		
Directive on the introduction of measures to encourage improvements in the safety and health at work of pregnant workers and workers who have recently given birth or are breastfeeding	**92/85/CEE** 2007/30/CE 2014/27/UE Règlement (UE) 2019/1243	**No**
Analysis: It is a directive aimed at companies for pregnant workers, workers who have recently given birth or are breastfeeding.		
Directive concerning the minimum requirements for improving the safety and health protection of workers in the mineral-extracting industries through drilling	**92/91/CE** 2007/30/CE	**No**
Analysis: Project sCO2-4-NPP is not used by extractive industries by drilling.		
Directive on the minimum requirements for improving the safety and health protection of workers in surface and underground mineral-extracting industries	**92/104/CEE** 2007/30/CE	**No**
Analysis: Project sCO2-4-NPP is not used in surface and underground extractive industries		
Directive concerning the minimum safety and health requirements for work on board fishing vessels	**93/103/CEE** 2007/30/CE	**No**
Analysis: Project sCO2-4-NPP is not a fishing vessel and will not be located in this type of vessel		

User directives	Reference amendment	Applicability sCO2-4-NPP
Directive on the protection of young people at work	**94/33/CE** 2007/30/CE 2014/27/UE Règlement (UE) 2019/1243	**No**
Analysis: It is a directive is addressed to companies under the protection of young people at work.		

Note:

The worker exposure thresholds for the application of Directive 98/24 / EC are set in the following regulations:

- Directive 91/322/EEC relating to the fixing of limit values of an indicative nature by the implementation of Council Directive 80/1107/EEC on the protection of workers against the risks linked to exposure to chemical, physical and biological during work, modified since 01/03/2006 by Directive 2006/15/EC.
- Directive 2000/39/EC relating to the establishment of a first list of occupational exposure limit values of an indicative nature in application of Council Directive 98/24/EC concerning the protection of health and safety of workers against the risks linked to chemical agents at the workplace, modified since 01/03/2006 by Directive 2006/15/EC, since 18/12/2011 by Directive 2009/161/ U and since 02/21/17 by Directive 2017/164/EU.
- Directive 2009/161/EU establishing a third list of limit values indicative of occupational exposure in application of Directive 98/24/EC, from 18/12/2011 and modified since 21/02/17 by the directive 2017/164/EU.
- Directive 2017/164/EU establishing a fourth list of limit values indicative of occupational exposure in accordance with Directive 98/24/EC, from 08/21/18.

Synthesis

After study, the following specific "user" directives or regulations may apply to certain equipment using the Project sCO2-4-NPP:

Table 58: Synthesis of European User Directives

User directives	Référence
Directive on minimum safety and health requirements for the use by workers at work of work equipment	**2009/104/EC**
Directive on minimum safety and health requirements for the use by workers at work of work equipment	**90/269/EEC**
Directive on the minimum requirements for the provision of safety and/or health signs at work	**92/58/EEC**
Directive on the protection of the health and safety of workers from the risks related to chemical agents at work	**98/24/EC**
Directive on the minimum health and safety requirements regarding the exposure of workers to the risks arising from physical agents (vibrations)	**2002/44/CE**
Directive on the minimum health and safety requirements regarding the exposure of workers to the risks arising from physical agents (noise)	**2003/10/EC**

User directives	Référence
Directive on the protection of workers from the risks related to exposure to carcinogens or mutagens at work	**2004/37/EC**
Directive on the minimum health and safety requirements regarding the exposure of workers to the risks arising from physical agents (electromagnetic fields)	**2013/35/ EC**
Directive on the minimum safety and health requirements for work with display screen equipment	**90/270/EC**

H.5 European directives / regulation on the environment

H.5.1 Introduction

Only the texts affecting the equipment as sold are concerned. For example, no text relating to the following themes is concerned:

- Impact on the manufacturing process of this equipment,
- User obligations regarding waste disposal,
- Obligations of Member States (for example: policies towards producers of waste),
- …

European environmental regulations include directives and regulations.

The European directives which may be applicable before analysis with the Project sCO2-4-NPP are:

Table 59: Applicability of European Environmental Directives for Project sCO2-4-NPP

Environmental directives / regulations	Reference amendment	Applicability sCO2-4-NPP
Directive on batteries and accumulators and waste batteries and accumulators	**2006/66/CE** 2008/12/CE 2008/103/CE 2013/56/UE 2018/849/UE	**Yes**
Analysis: Project sCO2-4-NPP do not have any batteries or accumulators		

Environmental directives / regulations	Reference amendment	Applicability sCO2-4-NPP
Directive on the restriction of the use of certain hazardous substances[18] [19] [20] in electrical and electronic equipment (ROHS)	**2011/65/UE** 2012/50/UE 2012/51/UE 2014/1/UE à 2014/16/UE 2014/69/UE 2014/70/UE à 2014/76/UE 2015/573/UE 2015/574/UE 2015/863/UE 2016/585/UE 2016/1028/UE 2016/1029/UE 2017/1009/UE 2017/1010/UE 2017/1011/UE 2017/1975/UE 2017/2102/UE 2018/736/UE à 2018/742/UE 2019/1845/UE 2019/1846/UE 2019/169 à 2019/178 2020/360/UE 2020/361/UE 2020/364/UE 2020/365/UE 2020/366/UE 2021/647/UE 2021/1978/UE 2021/1979/UE 2021/1980/UE	**Yes**
Analysis: Project sCO2-4-NPP contains electrical and electronic components or products.		

[18] Appendix II specifies the substances subject to limitations referred to in Article 4 (1) and maximum concentration values tolerated by weight in homogeneous materials. Lead (0.1%), Mercury (0.1%), Cadmium (0.01%), Hexavalent chromium (0.1%), Polybromobiphenyls (PBB) (0.1%), Polybromodiphenylethers (PBDE) (0, 1%), Bis (2-ethylhexyl) phthalate (DEHP) (0.1%), Benzyl butyl phthalate (BBP) (0.1%), Dibutyl phthalate (DBP) (0.1 %), Diisobutyl phthalate (DIBP) (0.1%)

[19] The limitation of the use of DEHP, BBP, DBP and DIBP applies to medical devices, including in vitro medical devices, and to monitoring and control instruments, including monitoring and control instruments industrial, as of July 22, 2021.

The limitation of the use of DEHP, BBP, DBP and DIBP does not apply to cables or spare parts intended for repair, reuse, update of functionalities or capacity building of EEE placed on the market before July 22, 2019, neither to medical devices, including in vitro medical devices, nor to control and monitoring instruments, including industrial monitoring and control instruments, placed on the market before 22 July 2021.

Environmental directives / regulations	Reference amendment	Applicability sCO2-4-NPP
Directive on waste electrical and electronic equipment (WEEE)	**2012/19/UE** 2018/849/UE	**Yes**
Analysis: Project sCO2-4-NPP contains electrical and electronic components or products.		
Directive on waste[21].	**2008/98/CE** 2015/1127 2018/851 Règlement (UE) 1357/2014 2017/997	**Yes**
Analysis: Project sCO2-4-NPP may possibly generate waste within the meaning of Directive 2008/98 / EC, in particular for any “withdrawal from service” or “dismantling” phases. BH-NP company must write a "end of life" document		

The restriction on the use of DEHP, BBP and DBP does not apply to toys, to which the restriction on the use of DEHP, BBP and DBP already provided for in section 51 of Appendix XVII already applies. of Regulation (EC) No 1907/2006.

[20] Appendix I: Categories of EEE covered by this Directive

1. Large household appliances.
2. Small household appliances.
3. IT and telecommunications equipment.
4. Consumer equipment.
5. Lighting equipment.
6. Electrical and electronic tools.
7. Toys, leisure and sports equipment.
8. Medical devices.
9. Monitoring and control instruments including industrial monitoring and control instruments.
10. Automatic dispensers.
11. Other EEE not covered by any of the categories above.

[21] The directive establishes a legal framework for the treatment of EU waste. It aims to protect the environment and human health by emphasizing the importance of appropriate waste management and recovery and recycling techniques to reduce pressures on resources and improve their use.

Key points :

- The directive establishes a waste hierarchy: prevention, reuse, recycling, recovery (energy, for example) and disposal.
- It confirms the polluter pays principle that the costs of waste management are borne by the original waste producer.
- It introduces the concept of extended producer responsibility, which may include the obligation for manufacturers to accept returned products and dispose of them after use.
- It distinguishes between waste and by-products *.
- Waste must be treated without creating a risk for water, air, soil, fauna or flora, without causing noise or olfactory pollution, without damaging the landscapes and sites of particular interest.
- Producers or holders of waste must treat them themselves or entrust their treatment to an officially recognized operator. They must be licensed and subject to periodic inspection.
- The competent national authorities must establish waste management plans and waste prevention programs.
- Special conditions apply to hazardous waste, used oils and bio-waste.
- The directive sets recycling and recovery targets to be achieved by 2020 for household waste (50%) and construction and demolition waste (70%).
- It does not cover certain types of waste such as radioactive elements, decommissioned explosives, faeces, waste water and animal carcasses.

Environmental directives / regulations	Reference amendment	Applicability sCO2-4-NPP
Directive on end-of life vehicles **<u>For information</u>** This directive was notably transposed by: - Order of March 9, 2012 concerning the provisions relating to the construction of vehicles, components and equipment aimed at the disposal of end-of-life vehicles - Decree n ° 2011-153 dated 4 February 2011 laying down various provisions for adapting to Community law with regard to the management of end-of-life vehicles and waste electrical and electronic equipment	**2000/53/CE** Décisions 2002/525/CE 2005/63/CE 2005/438/CE 2005/673/CE 2008/689/CE 2010/115/UE Directives 2008/33/CE 2008/112/CE 2011/37/UE 2013/28/UE 2016/774/UE 2017/2096/UE 2018/849/UE 2020/362/UE 2020/363/UE	**No**
<u>Analysis</u>: Project sCO2-4-NPP is not a component of a vehicle		
Directive on packaging and packaging waste[22]	**94/62/CE** 2004/12/CE 2005/20/CE 2013/2/UE 2015/720/UE 2018/852/UE Règlement 1882/2003 219/2009	**No**
<u>Analysis</u>: Project sCO2-4-NPP and their packaging do not entail the supply of packaging as defined within the meaning of the directive. As a reminder, the French environment code in force to date (article R543-43, transposition of directive 94/62/EC), indicates that examples illustrating the application of the criteria of the directive are available by order.		
Regulation (UE) on requirements relating to gaseous and particulate pollutant emission limits and type-approval for internal combustion engines for non-road mobile machinery.	**2016/1628** Règlement (UE) 2020/1040	**No**

[22] This directive only applies to packaging intended to allow handling, and routing from producer to consumer or user, and to ensure the presentation of equipment. It does not apply to the packaging which is necessary to contain, support or preserve this product throughout its life cycle and that all the elements are not intended to be used, consumed or eliminated together.

It also applies to the packaging of equipment except those mentioned in the previous paragraph.

Environmental directives / regulations	Reference amendment	Applicability sCO2-4-NPP
Analysis: Project sCO2-4-NPP is not a mobile road vehicle		
Directive on the approximation of the laws of the Member States relating to the noise emission in the environment by equipment for use outdoors	**2000/14/CE** 2005/88/CE Règlement (UE) 219/2009 2019/1243	**No**
Analysis: Project sCO2-4-NPP does not contain equipment as defined by the directive		
Directive establishing a framework for the setting of ecodesign requirements for energy-related products. NOTE: Refer to the execution measures[23] and the volume of sales and exchanges	**2009/125/CE** 2012/27/UE[24]/ 25	**No**
Analysis: Project sCO2-4-NPP does not contain and is not an energy-related product.		
Directive on the disposal of polychlorinated biphenyls and polychlorinated terphenyls (PCB/PCT) As a reminder, the sale and acquisition of PCB / PVT or devices containing PCB / PVT as well as the marketing of such new devices are prohibited in France since the decree of February 2, 1987	**96/59/CE** Règlement (UE) 596/2009	**No**
Analysis: Project sCO2-4-NPP is new equipment and must not contain PCB or PCT		
Directive on protective measures against pests of plants.	**2016/2031** Règlement (UE) 2017/625	**No**
Analysis: Project sCO2-4-NPP does not include logistic box which include wood.		

Note:

The RoHS and WEEE directives do not apply to equipment constituting vehicles or boats, since vehicles or boats are not part of the list of equipment mentioned in Appendix I to the WEEE directive and only the equipment listed in this Appendix or intended to be integrated into equipment listed therein are subject to these directives. On the other hand, these directives are applicable to the electrical equipment of ship's batches and the means of support if this equipment is listed in this Appendix.

In the context of the application of Directive 94/62/EC as amended, the following texts should be taken into account:

[23] Under Article 15 of Directive 2009/125/EC, only products with a significant volume of sales and trade, that is to say, are covered by implementing measures. indicative, more than 200 000 units per year in the Community, according to the most recent figures available.

[24] Pursuant to Directive 2010/31/EU of the European Parliament and of the Council of 19 May 2010 on the energy performance of buildings (4), Member States are required to set energy performance requirements for building elements which are part of the building envelope and of the system requirements for total energy performance, correct installation and appropriate sizing, adjustment and control for technical building systems installed in existing buildings. The fact that these requirements may, in certain circumstances, limit the installation of energy-related products which comply with this Directive and its implementing measures is compatible with the objectives of this Directive, provided that these requirements do not constitute an undue obstacle in the market.

[25] Directive 2018/844/EU amends Directive 2012/27/EU relating to energy efficiency and in particular Article 4 thereof concerning the renovation of buildings.

- Commission Decision 2005/270/EC of 22 March 2005 establishing the tables corresponding to the database system in accordance with Directive 94/62/EC of the European Parliament and of the Council on packaging and packaging waste.
    - These tables serve to harmonize the characteristics and presentation of data on packaging and packaging waste and to make it compatible from one Member State to another. The data are intended to be used to monitor the implementation of the objectives of Directive 94/62/EC. The provision of data is only compulsory for the following packaging materials: glass, plastics, paper, cardboard, wood and metals.
- Commission Decision 2009/292/EC of March 24, 2009 establishing the conditions for a derogation for plastic boxes and plastic pallets having regard to the heavy metal concentration levels set by Directive 94/62/EC
- Communication from the Commission of 19/02/2005 in the context of the implementation of Directive 94/62/EC of the European Parliament and of the Council of 20 December 1994 on packaging and packaging waste.
    - This communication contains the list of harmonized standards, their title and their reference, required by Directive 94/62/EC.
- Decision 2001/524/EC on the publication of the references of standards EN 13428:2000, EN 13429:2000, EN 13430:2000, EN 13431:2000 and EN 13432:2000 in the Official Journal of the European Communities in the framework of the implementation of Directive 94/62/EC on packaging and packaging waste.
- Commission Decision 2001/171/EC of 19 February 2001 establishing the conditions for a derogation for glass packaging with regard to the concentration levels of heavy metals laid down in Directive 94/62/EC relating to packaging and packaging waste.
- Decision extended by: Commission Decision 2006/340/EC
- Commission Decision 1999/177/EC of 8 February 1999 establishing the conditions for a derogation for plastic boxes and plastic pallets having regard to the heavy metal concentration levels set by Directive 94/62/CE relating to packaging and packaging waste.
- Commission Decision 97/129/EC of 28 January 1997 establishing the identification system for packaging materials, in accordance with Directive 94/62/EC of the European Parliament and of the Council on packaging and waste 'packaging.
    - This decision establishes the numbering methods and abbreviations used as a basis for the identification system, indicating the nature of the packaging material or materials used and specifying which materials are subject to the identification system.

H.5.2 Synthesis

After study, the following European directives and regulations on the environment can be applied to the Project sCO2-4-NPP:

Table 60: Synthesis European Environmental Directives

Environmental directives / regulations	Reference
Directive on batteries and accumulators and waste batteries and accumulators	**2006/66/CE**
Directive on the restriction of the use of certain hazardous substances in electrical and electronic equipment (ROHS)	**2011/65/EU**
Directive on waste electrical and electronic equipment (WEEE)	**2012/19/EU**

Environmental directives / regulations	Reference
Directive on waste	**2008/98/EC**

H.6 European regulations on the environment and chemicals

European regulations that may be applicable before analysis to at least one piece of equipment from the Project sCO2-4-NPP:

Table 61: Applicability of European regulations on the environment and chemicals for Project sCO2-4-NPP

Regulations	Reference amendment	Applicability Trial Gun
Regulation concerning the Registration, Evaluation, Authorization and Restriction of Chemicals (REACH)	**1907/2006** Regulations 1354/2007 987/2008 1272/2008 0134/2009 0552/2009 0276/2010 0453/2010 143/2011 207/2011 252/2011 253/2011 366/2011 494/2011 109/2012 125/2012 412/2012 835/2012 836/2012 847/2012 848/2012 126/2013 348/2013 517/2013	

Regulations	Reference amendment	Applicability Trial Gun
	1272/2013 301/2014 317/2014 474/2014 895/2014 2015/282 2015/326 2015/628 2015/830 2015/1494 2016/26 2016/217 2016/863 2006/1005 2016/1017 2016/1688 2016/2235 2017/227 2017/706 2017/999 2017/1000 2017/1510 2018/35 2018/588 2018/589 2018/675 2018/1513 2018/1881 2018/2005 2019/957 2019/1148 2019/1691	**Yes**
	2020/171 2020/507 2020/878 2020/1149 2020/2081 2020/2096 2020/2160 2021/57 2021/979 2021/1199 2021/1297 2021/2030 2021/2045 2021/2204	

Regulations	Reference amendment	Applicability Trial Gun
Analysis: The BH-NP company must list the substances subject to authorization from the "Appendix XIV" list and those from the candidate list for this same Appendix XIV of the regulations and which are possibly contained in Project sCO2-4-NPP. Furthermore, the BH-NP company must ensure that the equipment constituting the Project sCO2-4-NPP does not contain dangerous substances, certain mixtures and dangerous articles whose use is restricted and specified in Appendix XVII[26] of the regulations. As a reminder: When applying the REACH regulation, the following texts should be taken into account: - Notice to economic operators on the obligation to communicate information on the substances contained in the articles in application of articles 7.2 and 33 of the REACH regulation - interpretation of the threshold of 0.1 % (mass / mass), - Numerous other notices to economic operators on the obligation to communicate information on the substances contained in the articles in application of articles 7.2 and 33 of the REACH regulation.		

[26] Appendix XVII: Restrictions applicable to the manufacture, placing on the market and use of certain dangerous substances and certain dangerous mixtures and articles (incorporation of Directive 76/769/EEC into the REACH regulation)

Regulations	Reference amendment	Applicability Trial Gun
Regulation on classification, labelling and packaging of substances and mixtures	**1272/2008** 790/2009 286/2011 618/2012 487/2013 517/2013 758/2013 944/2013 605/2014 2015/491 1297/2014 2015/1221 2016/918 2016/1179 2017/542 2017/776 2018/669 Notice brai de goudron Règlement (UE) 2018/1480 2019/521 2019/1243 2020/11 2020/217 2020/1182 2020/1413 2020/1676 2020/1677 2021/643 2021/797 2021/1962	**No**
Analysis: Project sCO2-4-NPP do not fall under the requirements of the CLP Regulation. * For information, the CLP regulation has an impact on the REACH information and labeling requirements		

Regulations	Reference amendment	Applicability Trial Gun
Regulation on substances[27] that deplete the ozone layer As a reminder, this regulation sets requirements and rules relating to the production, import, export, sale, use, recovery, recycling, regeneration and destruction of substances that damage the ozone layer.	**1005/2009** Règlement 744/2010 1087/2013 1088/2013 605/2017	**No**
Analysis: Project sCO2-4-NPP does not contain ozone-depleting substances.		
Regulation on persistent organic pollutants (POP) As a reminder, the purpose of this Regulation is to protect human health and the environment against POPs by prohibiting, eliminating as soon as possible or limiting the manufacture, placing on the market and use of the substances referred to by the Stockholm Convention on Persistent Organic Pollutants	**2019/1021** Règlement(UE) 2020/784 2020/1203 2020/1204 2021/115 2021/277	**Yes**
Analysis: Project sCO2-4-NPP may possibly contain persistent organic pollutants (POPs) in components or equipment.		
Nuclear Safety Directive Council Directive 2009/71/Euratom of 25 June 2009 establishing a Community framework for the nuclear safety of nuclear installations.	2014/87 /Euratom	**Yes**
Analysis: The Project sCO2-4-NPP designs equipment for passive decay heat removal, which falls within the scope of severe accident prevention and mitigation. As a reminder: It should be noted that EU directives were not specifically considered in WP3 (but indirectly, see [28]). As you know, each country has its own nuclear regulation, where EU directives need to be implemented in country regulation. Regarding the Fukushima accident the most important for sCO2-4-NPP project is Council Directive 2014/87/Euratom of 8 July 2014 amending Directive 2009/71/Euratom establishing a Community framework for the nuclear safety of nuclear installations [2], especially [29]: • Article 8a – Nuclear safety objective for nuclear installations, • Article 8b – Implementation of the nuclear safety objective for nuclear installations and • Article 8c - Initial assessment and periodic safety reviews.		

Synthesis

After study, the following "environmental" regulations may apply to the Project sCO2-4-NPP:

[27] The regulated substances are listed by group (I to IX) in Appendix I to the directive. Appendix II on new substances is divided into two parts: Part A: Substances restricted under Article 24 (1), Part B: Substances for which information is to be communicated under Article 27

Table 62: Synthesis European Regulation on Environment and Chemicals

Regulation	**Reference** amendment
Regulation REACH	**1907/2006**
Nuclear Safety Directive	**2014/87/Euratom**
Regulation on persistent organic pollutants (POP)	**2019/1021**

H.7 Radio Regulations of the International Telecommunication Union (ITU)

Table 63: Applicability of Radio Regulations of ITU for Project sCO2-4-NPP

Regulation	**Reference**	**Applicability**
Radio Regulations of the International Telecommunication Union	ITU 2012 Edition	**No**
Scope: These regulations apply to radiocommunication devices. It is a question of this regulation of fixing the rules as regards distribution and limitation of the frequency bands and also of avoiding interference between the various stations for a good functioning of the communications or radio services. Analysis: The Project sCO2-4-NPP does not include communicating equipment which may possibly fall within the scope of the ITU regulations.		

H.8 Mandatory application norms

Mandatory application norms that may be applicable before analysis for Project sCO2-4-NPP:

Table 64: Mandatory application norms for Project sCO2-4-NPP

Mandatory application norms	**Year and decree**	**Applicability**
NF C 15-100 Low voltage electrical installations	December 2002 Mandatory by decree of 10/22/1969	**Yes**
Analysis: The Project sCO2-4-NPP is not an electrical installation within the meaning of the norm.		

Mandatory application norms	Year and decree	Applicability
NF X 08-100 Colors Rigid piping Identification of fluids by conventional colors	February 1986 Mandatory by decrees of 04/11/1993 and 24/07/1995	**No**
Analysis: These technical recommendations apply to industrial installations comprising piping networks for fluids.		

Synthesis

After review, two mandatory standards can apply to The Project sCO2-4-NPP.

Appendix I Connections between codes and directives

The connections between the Labor and Environment codes and the applicable European directives / regulations taken into account in this study are included in the Excel file:

- 15176666-1 1-86A78PG_101 rev0 Regulatory reference – Connections Texts.xls

This excel file has 25 pages and is attached at the end of this deliverable.

Code	Part	Book	Title	Chapter	Requirements	Project SCO2-4-NPP	Directive 2014/68/UE	Directive 2014/30/UE	Directive 2014/35/UE	Directive 2006/42/CE	Directive 2009/104/CE	Directive 90/269/CEE	Directive 92/58/CEE	Directive 98/24/CE	Directive 2004/37/CE	Directive 2003/10/CE	Directive 2013/35/UE	Directive 2002/44/CE	Directive 90/270/CEE	Règlement REACH 1907/2006	Directive 2006/66/CE	Directive 2011/65/UE	Directive 2012/19/UE	Directive 2008/98/CE	Règlement (UE) 2019/1021
Travail	IV	I	II		Titre II : Principes généraux de prévention	X																			
Travail	IV	I	IV	I	Titre IV : Information et formation des travailleurs	X																			
Travail	IV	I	V		Titre VI : Dispositions relatives à la prévention des effets de l'exposition à certains facteurs de risques professionnels et au compte professionnel de prévention	X																			
Travail	IV	I	VI	I	Chapitre Ier : Facteurs de risques professionnels (Article L4161-1)	X						X		X		X									
Travail	IV	II	II	II	Chapitre II : Aération, assainissement (Articles R4222-1 à R4222-26)	X																			
Travail	IV	II	II	III	Section 1 Éclairage (Articles R4223-1 à R4223-12)	X																			
Travail	IV	II	II	III	Section 2 Ambiance thermique (Articles R4223-13 à R4223-15)	X																			
Travail	IV	II	II	IV	Chapitre IV : Sécurité des lieux de travail	X																			
Travail	IV	II	II	IV	Section 1 Caractéristiques des lieux de travail (Articles 4224-1 à R4224-8)	X																			
Travail	IV	II	II	IV	Section 5 Signalisation et matérialisation relatives à la santé et à la sécurité (Articles 4224-20 à R4224-24)	X							X												
Travail	IV	II	II	V	Chapitre V : Aménagement des postes de travail	X																			
Travail	IV	III	I		SANTÉ ET SÉCURITÉ AU TRAVAIL, CONCEPTION ET MISE SUR LE MARCHÉ DES ÉQUIPEMENTS DE TRAVAIL ET DES MOYENS DE PROTECTION	X																			
Travail	IV	III	I	I	Chapitre Ier : Règles générales	X				X															
Travail	IV	III	I	I	Section 1 : Définitions et champs d'application	X				X															
Travail	IV	III	I	I	Sous-section 1 : Dispositions communes (Articles R4311-1 à R4311-3)	X				X															
Travail	IV	III	I	I	Sous-section 2 : Equipements de travail obéissant à des règles pour la mise sur le marché (Article R4311-4 à R4311-7)	X	X	X	X	X															
Travail	IV	III	I	I	Section 2 : Dispositions d'application (Articles R4311-12 à R4311-16)	X				X															
Travail	IV	III	I	II	Chapitre II : Règles techniques de conception	X				X															
Travail	IV	III	I	II	Section 1 : Équipements de travail (Articles R4312-1 à R4312-5)	X				X															
Travail	IV	III	I	III	Chapitre III : Procédures de certification de conformité	X				X															
Travail	IV	III	I	III	Section 1 : Formalités préalables à la mise sur le marché (Articles R4313-1 à R4313-18)	X				X															
Travail	IV	III	I	III	Section 2 : Les procédures d'évaluation de la conformité (Articles R4313-19 à R4313-74)	X				X															
Travail	IV	III	I	III	Section 3 : Les procédures d'évaluation de la conformité applicables à chaque catégorie de machines, équipements de travail ou d'équipements de protection individuelle (Articles R4313-75 à R4313-82)	X				X															
Travail	IV	III	I	III	Section 4 : Organismes notifiés (Articles R4313-83 à R4313-89)	X				X															
Travail	IV	III	I	III	Section 5 : Communication à l'autorité administrative et mesures de contrôle (Articles R4313-90 à R4313-95)	X				X															
Travail	IV	III	I	IV	Chapitre IV : Procédure de sauvegarde (Articles R4314-1 à R4314-5)	X				X															
Travail	IV	III	I	IV	Article Annexe I à l'article R4312-1	X				X															
Travail	IV	III	II		SANTÉ ET SÉCURITÉ AU TRAVAIL, UTILISATION DES ÉQUIPEMENTS DE TRAVAIL ET DES MOYENS DE PROTECTION	X																			
Travail	IV	III	II	I	Chapitre Ier : Règles générales (Article R4321-1à R4321-6)	X	X	X	X	X	X														
Travail	IV	III	II	II	Chapitre II : Maintien en état de conformité (Articles R4322-1à R4322-3)	X	X				X														
Travail	IV	III	II	III	Chapitre III : Mesures d'organisation et conditions d'utilisation des équipements de travail et des équipements de protection individuelle	X																			
Travail	IV	III	II	III	Section 1 Information et formation des travailleurs (Articles R4323-1 à R4323-5)	X					X														
Travail	IV	III	II	III	Section 2 Installation des équipements de travail (Articles R4323-6 à R4323-13)	X					X														
Travail	IV	III	II	III	Section 3 Utilisation et maintenance des équipements de travail (Articles R4323-14 à R4323-21)	X					X														
Travail	IV	III	II	IV	Chapitre IV : Utilisation des équipements de travail non soumis à des règles de conception lors de leur première mise sur le marché	X																			
Travail	IV	III	II	IV	Section 1 Prescriptions techniques communes (Articles R4324-1 à R4324-23)	X					X														
Travail	IV	IV	I		RISQUES CHIMIQUES	X																			
Travail	IV	IV	I	I	Chapitre Ier : Mise sur le marché des substances et mélanges (Articles R4411-1 à R4411-86)	X														X					
Travail	IV	IV	I	I	Section 4 Protection des utilisateurs et acheteurs	X																			

Appendix J Regulatory reference

The regulatory reference is included in the Excel file:

- 15176666-1 1-86A78PG_100 rev0 Regulatory reference - Requirements matrix.xls

This Excel file has 28 pages and is attached at the end of this deliverable.

Line	N°	Type of text	Date	Publication date OJ	Title	Requirements	SUB01 : CHX Exchanger	SUB2 : DUHS exchanger	SUB3 : CO2 tanks	SUB4 : Turbomachine	SUB5 : Battery	SUB6 : Electrical Equipment	SUB7 : Electronic Components	Type of justification expected	Comments
1	2006/42/EC	European directive	17-mai-06	OJ L 157 du 9.6.2006, p. 24–86	Machinery directive	Manufacturer must perform risk analysis	x	x	x	x	x	x	x	A	The LEONARDO company must perform risk analysis for the Project SCO2-4-NPP
2	2006/42/CE	European directive	17-mai-06	OJ L 157 du 9.6.2006, p. 24–86	Machinery directive	1.1.2 Security Integration Principles	x	x	x	x	x	x	x	I and A	To be compliant, the Project SCO2-4-NPP must meet all the applicable requirements of the machinery directive See all comments on applicable requirements in this tab
3	2006/42/CE	European directive	17-mai-06	OJ L 157 du 9.6.2006, p. 24–86	Machinery directive	1.1.3 Materials and products	x	x	x	x	x	x	x	A	For this point, refer to the tab "Danger. Prohibit. Materials" of this matrix
4	2006/42/CE	European directive	17-mai-06	OJ L 157 du 9.6.2006, p. 24–86	Machinery directive	1.1.4 Lighting								I, A or M	Not applicable
5	2006/42/CE	European directive	17-mai-06	OJ L 157 du 9.6.2006, p. 24–86	Machinery directive	1.1.5 Machine design for handling	x	x	x	x		x	x	A or M	The documentation of Project SCO2-4-NPP must indicate the masses of the main components and the type of handling (manual or mechanized)
6	2006/42/CE	European directive	17-mai-06	OJ L 157 du 9.6.2006, p. 24–86	Machinery directive	1.1.6 Ergonomics	x	x	x	x		x	x	A, I and E	This point will be validated by the tests and the suitability of the Project SCO2-4-NPP for the planned operations.
7	2006/42/CE	European directive	17-mai-06	OJ L 157 du 9.6.2006, p. 24–86	Machinery directive	1.1.7 Workplace								I	Not applicable
8	2006/42/CE	European directive	17-mai-06	OJ L 157 du 9.6.2006, p. 24–86	Machinery directive	1.1.8 Seat								I	Not applicable
9	2006/42/CE	European directive	17-mai-06	OJ L 157 du 9.6.2006, p. 24–86	Machinery directive	1.2.1 Safety and reliability of control systems	x	x		x		x	x	A et E	you must justify the Safety and reliability of control systems, in particular for the security functions
10	2006/42/CE	European directive	17-mai-06	OJ L 157 du 9.6.2006, p. 24–86	Machinery directive	1.2.2 Service organ	x	x		x		x	x	I et E	The control and command organ must be identified in French or by standardized pictograms
11	2006/42/CE	European directive	17-mai-06	OJ L 157 du 9.6.2006, p. 24–86	Machinery directive	1.2.3 Start-up	x	x		x		x	x	I et E	The control and command organ must be identified in French or by standardized pictograms

Page 1

Page 2

Revision | Personal safety | **Machinery and lifting** | Electrical and ATEX | Pressure equipment | Danger. prohibit. materials | Emis

Appendix K France major nuclear regulations

Table 65: France major nuclear regulations

Document Reference	Description
ACCIDENTS AND CIVIL SECURITY	NOT 1989-10-16 (unpublished) information on the distribution of stable iodine to the population exposed to radioactive iodine in the event of a nuclear accident
ACCIDENTS AND CIVIL SECURITY	DIR 2005-11-30 (Official Journal of 02/12/2005) relating to the application of the international convention on assistance in the event of a nuclear accident or radiological emergency situation
ACCIDENTS AND CIVIL SECURITY	DIR 2005-05-30 (Official Journal of 05/31/2005) relating to the application of the international convention on the rapid notification of a nuclear accident and the decision of the Council of the European Communities concerning Community procedures for the rapid exchange of information in the event of a radiological emergency
ACCIDENTS AND CIVIL SECURITY	DIR 2005-04-07 (OJ of 10/04/2005) on the action of the public authorities in the event of an event resulting in a radiological emergency situation
ACCIDENTS AND CIVIL SECURITY	DEC 1987-12-14 (87/600/EURATOM) (JOCE L 371 of 30/12/1987) concerning Community procedures for the rapid exchange of information in the event of a radiological emergency
ACCIDENTS AND CIVIL SECURITY	D 2005-10-12 (2005-1269) (OJ of 13/10/2005) relating to the national alert code and the obligations of radio and television services and holders of any other means of communication to the public and taken pursuant to article 8 of law no. 2004-811 of 13 August 2004 on the modernization of civil security
ACCIDENTS AND CIVIL SECURITY	D 2005-09-13 (2005-1158) (Official Journal of 09/15/2005) relating to special intervention plans concerning certain structures or fixed installations and taken pursuant to Article 15 of Law No. 2004-811 of 13 August 2004 relating to the modernization of civil security, amended by D 2011-02-25 (2011-220) (OJ of 01/03/2011)
ACCIDENTS AND CIVIL SECURITY	D 2005-09-13 (2005-1157) (Official Journal of 09/15/2005) 2005 relating to the ORSEC plan and adopted pursuant to Article 14 of Law No. 2004-811 of August 13, 2004 on the modernization of civil security
ACCIDENTS AND CIVIL SECURITY	D 1989-06-02 (89-360) (Official Journal of 08/06/1989) publishing the convention on assistance in the event of a nuclear accident or radiological emergency situation, adopted in Vienna on September 26, 1986
EXTERNAL ATTACKS	RFS 1992-10-07 (I.1.a) taking into account the risks associated with aircraft crashes
EXTERNAL ATTACKS	RFS 1982-05-07 (I.2.d) taking into account the risks associated with the industrial environment and communication routes
EXTERNAL ATTACKS	CIR 2010-02-17 (BO Environment 2010/12 of 07/10/2010) relating to the control of activities in the vicinity of basic nuclear installations (BNI) likely to present dangers outside the site

Document Reference	Description
NUCLEAR QUALITY ASSURANCE	RD 1984-08-10 (OJ of 09/22/1984) relating to the quality of the design, construction and operation of basic nuclear installations, modified by D 2002-02-22 (2002-255) (OJ of 02/26/2002) (valid until June 30, 2013)
AUTHORIZATION TO OPERATE	Decree No. 2000-877 of September 7, 2000 relating to the authorization to operate electricity production facilities
AUTHORIZATION TO OPERATE	RD 2012-02-07 (Official Journal of 08/02/2012) setting the general rules relating to basic nuclear installations
AUTHORIZATION TO OPERATE	CIR 1984-08-09 (SIN 4509/84) (BOMRICE 4/1984) relating to the procedures applicable to the equipment of basic nuclear installations and to installations classified for the protection of the environment located in a perimeter of basic nuclear installation and the opinion of the Council of State of October 4, 1983
AUTHORIZATION TO OPERATE	RD 2012-02-07 (Official Journal of 08/02/2012) setting the general rules relating to basic nuclear installations
AUTHORIZATION TO OPERATE	RD 2010-09-22 (Official Journal of 02/10/2010) approving decision no. 2010-DC-0192 of the Nuclear Safety Authority of 22 July 2010 relating to the detailed content of the information that must be attached to requests authorization or renewal of authorization pursuant to Article R. 1333-43 of the Public Health Code
AUTHORIZATION TO OPERATE	AR 2010-01-29 (OJ of 02/17/2010) approving decision No. 2009-DC-0148 of the Nuclear Safety Authority of July 16, 2009 relating to the detailed content of the information that must be attached to the declarations nuclear activities referred to in 1° and 3° of Article R. 1333-19 of the Public Health Code
AUTHORIZATION TO OPERATE	AR 2008-09-26 (OJ of 10/11/2008) approving decision 2008-DC-0106 of the Nuclear Safety Authority of July 11, 2008 relating to the procedures for implementing internal authorization systems in basic nuclear installations
AUTHORIZATION TO OPERATE	AR 1996-03-11 (OJ of 03/15/1996) setting the limits beyond which plants for the preparation, manufacture or transformation of radioactive substances, as well as facilities intended for storage, deposit or use of radioactive substances, including waste, are considered as basic nuclear installations
AUTHORIZATION TO OPERATE	AR 1991-02-04 (OJ of 08/02/1991) fixing the list of products and devices subject to approval
NUCLEAR CONSTRUCTION	RFS 1986-06-04 (V.2.h) general rules applicable to the construction of civil engineering works
NUCLEAR CONSTRUCTION	RFS 1985-08-01 (I.3.c) geological and geotechnical studies of the site; determination of soil characteristics and studies of land behavior
NUCLEAR CONSTRUCTION	RFS 1981-07-30 (V.2.b) general rules applicable to the construction of civil engineering works
NUCLEAR CONSTRUCTION	RFS 1980-08-05 (I.2.a) taking into account the risks associated with aircraft crashes
CRITICALITY	RFS 1985-12-31 (II.2.2.a) (revision 1) enclosure sprinkler system design

Document Reference	Description
CRITICALITY	RFS 1984-10-18 (I.3.c) criticality risks
RADIOACTIVE WASTE	RFS 2006-05-26 (ASN/GUIDE/2/01) taking into account the seismic risk in the design of civil engineering works of basic nuclear installations with the exception of long-term storage of radioactive waste
RADIOACTIVE WASTE	RFS 1986-10-31 (III.2.e) (revision of 05/29/1995) prerequisites for the approval of solid radioactive waste packages intended for surface disposal
RADIOACTIVE WASTE	RFS 1985-02-01 (III.2.d) specific provisions applicable to the production, control, processing, packaging and storage of waste encapsulated in cement and resulting from the processing of irradiated fuel in nuclear reactors ordinary water under pressure
RADIOACTIVE WASTE	RFS 1984-04-05 (III.2.c) specific provisions applicable to the production, control, processing, conditioning and storage of low- or intermediate-level waste coated in bitumen and resulting from the processing of fuels irradiated in pressurized ordinary water nuclear reactors
RADIOACTIVE WASTE	REC 2006-10-24 (2006/851/EURATOM) (OJ L 330 of 28/11/2006) concerning the management of financial resources intended for the dismantling of nuclear installations, spent fuel and radioactive waste
RADIOACTIVE WASTE	DIR 2006-11-20 (2006/117/EURATOM) (OJ L 337 of 05/12/2006) of the Council of 20 November 2006 relating to the monitoring and control of transfers of radioactive waste and spent nuclear fuel
RADIOACTIVE WASTE	DEC 2008-03-05 (2008/312/EURATOM) (OJEU L 107 of 17/04/2008 + corrigendum OJEU L 343 of 23/12/2011) establishing the uniform document for the monitoring and control of radioactive waste transfers and spent nuclear fuel referred to in Council Directive 2006/117/Euratom
ELECTRICITY	RFS 2000-05-15 (II.4.1.a) software for safety classified electrical systems
ELECTRICITY	RFS 1986-09-23 (V.2.d) (revision 1) general rules applicable to the construction of electrical equipment
ELECTRICITY	RFS 1985-07-31 (IV.2.b) requirements to be taken into account in the design, qualification, implementation and operation of electrical equipment belonging to safety-classified electrical systems
ELECTRICITY	RFS 1984-12-21 (IV.1.a) classification of mechanical equipment, electrical systems, structures and civil engineering works
ESP	DMTP 30425 of 1998-12-04 relating to the conditions of application of articles 5.1 and 5.2 of the decree of July 23, 1943 and of article 17 of the decree of March 24, 1978 supplemented by DMTP 31717 of 2001-05- 02
ESP	D 1999-12-13 (99-1046) (OJ of 15/12/1999) relating to pressure equipment, last amended by D 2010-07-27 (2010-882) (OJ of 29/07/2010)
ESP	D 1943-01-18 (63) (OJ of 01/23/1943) regulating gas pressure devices, last amended by D 2010-03-23 (2010-323) (OJ of 03/25 /2010)
ESP	BSEI 09-227 of 2009-12-21 (BO Environment 2010/3 of 02/25/2010) relating to the application of article 16 of the ministerial decree of March 24, 1978 on welding (approves the AQUAP document 2008/02)

Document Reference	Description
ESP	AR 2001-04-10 (Official Journal of 04/27/2001) relating to the conditions of application of certain regulatory provisions of the decrees of April 2, 1926 and January 18, 1943
ESP	AR 1978-03-24 (OJ of 04/30/1978) regulating the use of welding in the construction and repair of pressure devices, last amended by AR 2001-04-10 (OJ of 27/ 04/2001)
ESPN	Order of 30/12/2015 relating to nuclear pressure equipment
ESPN	Order of 10 November 1999 relating to the monitoring of the operation of the main primary circuit and the main secondary circuits of pressurized water nuclear reactors
ESPN	Guide N°8 revised version 09/04/2012 Conformity assessment of nuclear pressure equipment
ESPN	RFS 1990-12-14 (V.2.e) (revision 2) general rules concerning several systems, structures or equipment - other general rules - nuclear units comprising a pressurized water reactor
ESPN	RFS 1990-06-08 (II.3.8) general design of elementary systems - other mechanical systems - construction and operation of the main secondary circuit
ESPN	DMTP 32719 of 2003-12-02 relating to the first periodic requalification of certain pipes equipping nuclear power plants for the production of electricity
ESPN	DEC 2011-07-28 (not published) of the Nuclear Safety Authority for the application of the Ministerial Decision JV/VF DEP-SD5-0049-2006 of January 31, 2006 relating to the conditions of use of the spare parts of the circuit main primary and main secondary circuits of pressurized water nuclear reactors (pending approval)
ESPN	DEC 2007-07-03 (2007-DC-0060) of the Nuclear Safety Authority relating to the approval of an organization for the inspection of nuclear pressure equipment in service subject to the decrees of April 2, 1926 and January 18, 1943
ESPN	DEC 2007-07-03 (2007-DC-0059) of the Nuclear Safety Authority approving an organization for the control of nuclear pressure equipment in service subject to the decrees of April 2, 1926 and January 18, 1943
ESPN	DEC 2007-06-08 (2007-DC-0058) (BO ASN of 09/18/2007) of the Nuclear Safety Authority concerning the approval of organizations for the inspection of nuclear pressure equipment
ESPN	DEC 2007-06-08 (2007-DC-0053) of the Nuclear Safety Authority on acceptance of a notified and authorized body
ESPN	DEC 2007-01-26 (2007-DC-0029) of the Nuclear Safety Authority on the acceptance of a recognized and authorized third party entity
ESPN	DEC 2007-01-26 (2007-DC-0028) of the Nuclear Safety Authority on acceptance of a notified and authorized body

Document Reference	Description
ESPN	DEC 2006-01-31 (JV/VF DEP-SD5-0049-2006) relating to the application of the order of 10 November 1999 to spare parts for the main primary circuit and the main secondary circuits of pressurized water reactors, amended by Royal Decree 2012-06-22 (OJ of 04/07/2012)
ESPN	DEC 2003-05-15 (DGSNR/SD5/BB/VF n°030192) technical classification rules for work on the main primary and secondary circuits of pressurized water reactors
ESPN	DEC 2003-05-13 (DGSNR/SD5/BB/VF n°030191) concerning the conditions for examining files relating to interventions on the main primary and secondary circuits of pressurized water reactors
ESPN	CIR 1999-11-10 (OJ of 05/01/2000) relating to the monitoring of the operation of the main primary circuit and the main secondary circuits of pressurized water nuclear reactors modified by CIR 2006-09-05 (BO Industrie of the 3rd quarter of 2006)
ESPN	CIR 1974-02-26 (OJ of 03/12/1974) relating to the application of the regulations for steam pressure devices to the main primary circuit of nuclear water boilers, last amended by CIR 1999-11-10 (OJ of 05/01/2000)
ESPN	RD 2005-12-12 (OJ of 01/22/2006) relating to nuclear pressure equipment
ESPN	RD 1999-12-21 (OJ of 28/12/1999) relating to the classification and conformity assessment of pressure equipment
ESPN	RD 1999-11-10 (OJ of 05/01/2000) relating to the monitoring of the operation of the main primary circuit and the main secondary circuits of pressurized water nuclear reactors, amended by RD 2005-12-12 (OJ of 01/22/2006)
ESPN	AR 1974-02-26 (OJ of 03/12/1974) relating to the construction of the main primary circuit of nuclear water boilers, last amended by AR 1999-11-10 (OJ of 01/05/2000)
GENERAL	Order of 31 December 1999 setting the general technical regulations intended to prevent and limit nuisances and external risks resulting from the operation of basic nuclear installations
GENERAL	Order of 7 February 2012 setting the general rules relating to basic nuclear installations
GENERAL	Euratom Directives
GENERAL	REG 2007-02-19 (300/2007/EURATOM) (OJ L 81 of 22/03/2007) establishing an instrument relating to cooperation in nuclear safety
GENERAL	L 2006-06-13 (2006-686) (OJ of 06/14/2006) relating to transparency and security in nuclear matters, last amended by ORD 2012-01-05 (2012-6) (OJ of 06/01/2012)
GENERAL	DIR 2009-06-25 (2009/71/EURATOM) (OJ L 172 of 02/07/2009) establishing a Community framework for the nuclear safety of nuclear installations

Document Reference	Description
GENERAL	Council Directive 2014/87/Euratom of 8 July 2014 amending Directive 2009/71/Euratom establishing a Community framework for the nuclear safety of nuclear installations.
GENERAL	D 2008-03-12 (2008-251) (OJ of 03/14/2008) relating to local information commissions at basic nuclear installations
GENERAL	D 2007-05-11 (2007-830) (OJ of 05/12/2007) relating to the nomenclature of basic nuclear installations, modified by D 2011-01-19 (2011-73) (OJ of 01/21/ 2011)
GENERAL	D 2002-02-22 (2002-254) (OJ of 02/26/2002) relating to the Institute for Radiation Protection and Nuclear Safety, last amended by D 2009-09-17 (2009-1120) (OJ of 09/18/2009)
GENERAL	D 2000-04-26 (2000-361) (Official Journal of 04/28/2000) relating to the tax and additional taxes to which basic nuclear installations are subject pursuant to article 43 of the finance law for 2000, last modified by D 2011-12-22 (2011-1935) (OJ of 24/12/2011)
GENERAL	D 1996-10-31 (96-972) (Official Journal of 08/11/1996) publishing the Convention on nuclear safety, signed in Vienna on September 20, 1994
GENERAL	D 1991-04-12 (91-355) (Official Journal of 14/04/1991) defining, pursuant to article 4 of law 68-943 of 30 October 1968 as amended, the characteristics of reduced-risk installations
GENERAL	D 1983-06-27 (83-568) (OJ of 02/07/1983) relating to the organization of regional directorates for industry, research and the environment, last amended by D 2009- 05-25 (2009-589) (OJ of 05/26/2009)
GENERAL	CIR 2009-06-18 (BO Environment 2009/22 of 10/12/2009) relating to the implementation of the recommendations of the High Committee for Transparency and Information on Nuclear Security
FIRE	RFS 1988-11-21 (V.2.j) general rules relating to fire protection
FIRE	RFS 1985-02-28 (I.4.a) rules applicable to the prevention of chemical risks - protection against fire - basic nuclear installations other than nuclear reactors and particle accelerators
FIRE	RFS 1982-12-28 (V.2.f) general rules relating to fire protection
FLOOD	RFS 1984-04-12 (I.2.e) taking into account the risk of flooding of external origin
INSTRUMENTATION	RFS 1984-06-08 (I.3.b) seismic instrumentation
INSTRUMENTATION	RFS 1983-08-12 (Rule SIN A 4212/83) means of meteorological measurements - sites of basic nuclear installations not comprising a pressurized water reactor for the production of electrical energy
INSTRUMENTATION	RFS 1982-06-10 (V.1.b) means of meteorological measurements
MECHANICAL	RFS 1986-09-12 (V.2.c) (revision 1) general rules applicable to the production of mechanical equipment

Document Reference	Description
MECHANICAL	RFS 1984-12-21 (IV.2.a) requirements to be taken into account in the design of safety-classified mechanical equipment, conveying or containing a pressurized fluid and classified as levels 2 and 3
MECHANICAL	RFS 1980-08-05 (I.2.b) taking into account the risks of projectile emission following the bursting of turbo-alternator groups
MECHANICAL	DMTP 31590 of 2000-12-14 Equivalent certification of non-destructive testing agents (article 18 bis of the order of March 24, 1978)
METHODOLOGY	RFS 2002-12-26 (2002-01) development and use of probabilistic safety assessments
METHODOLOGY	RFS 1980-08-05 (I.3.a) use of single failure criterion in safety analyses
METHODOLOGY	AR 1999-12-31 (OJ of 02/15/2000) setting the general technical regulations intended to prevent and limit nuisances and external risks resulting from the operation of basic nuclear installations, amended by AR 2006-01-31 (OJ of 02/09/2006) (applicable until June 30, 2013)
RADIATION PROTECTION	Directive 96/29/Euratom of 13 May 1996 setting the basic standards relating to the health protection of the population and workers against the dangers resulting from ionizing radiation
RADIATION PROTECTION	Decree No. 2003-296 of March 31, 2003 relating to the protection of workers against the dangers of ionizing radiation
RADIATION PROTECTION	Decree No. 2002-460 of April 4, 2002
RADIATION PROTECTION	Decree No. 2003-295 of March 31, 2003
RADIATION PROTECTION	Order of October 13, 2003
RADIATION PROTECTION	ICRP Recommendation No. 63
RADIATION PROTECTION	IAEA recommendation BS N°115
RADIATION PROTECTION	DIR 1997-06-30 (97/43/EURATOM) (OJ L 180 of 09/07/1997) of the Council relating to the health protection of persons against the dangers of ionizing radiation during exposure for medical purposes, replacing the Directive 84/466/Euratom
RADIATION PROTECTION	DIR 1997-05-29 (97/23/EC) (JOCE n° L 181 of 09/07/1997 + Corrigendum JOCE n° L 250 of 23/09/1999) of the European Parliament and of the Council relating to the rapprochement of States members concerning pressure equipment, last amended by REG 2012-10-25 (1025/2012/EU) (OJ L 316 of 14/11/2012)
RADIATION PROTECTION	DIR 1996-05-13 (96/29/EURATOM) (OJ L 159 of 06/29/1996) setting the basic standards relating to the health protection of the population and workers against the dangers resulting from ionizing radiation
RADIATION PROTECTION	DIR 1990-12-04 (90/641/EURATOM) (JOCE L 349 of 13/12/1990) concerning the operational protection of outside workers exposed to a risk of ionizing radiation during their work in a controlled area
RADIATION PROTECTION	DIR 1989-11-27 (89/618/EURATOM) (JOCE L 357 of 07/12/1989) concerning the information of the population on the applicable health

Document Reference	Description
	protection measures and on the behavior to adopt in the event of a radiological emergency
RADIATION PROTECTION	DEC 2007-12-18 (2007-DC-0087) (BO ASN of 07/01/2008) approving organizations in charge of individual monitoring of the external exposure of workers exposed to ionizing radiation
RADIATION PROTECTION	DEC 2007-12-18 (2007-DC-0086) (BO ASN of 07/01/2008) of the Nuclear Safety Authority approving medical biology analysis laboratories (LABM) in charge of individual monitoring of internal exposure of workers exposed to ionizing radiation
RADIATION PROTECTION	Public Health Code - Articles R1333-1 to R1333-112 + Appendix 13-7 and Appendix 13-8 - Ionizing radiation (codified by D 2003-05-21 (2003-462) and last modified by D 2012- 04-27 (2012-597) (OJ of 04/29/2012))
RADIATION PROTECTION	Public Health Code - Articles L1333-1 to L1333-20 - Ionizing radiation, last amended by L 2012-03-05 (2012-300) (OJ of 06/03/2012)
RADIATION PROTECTION	CIR 2011-07-11 (DGS/DUS 2011-340) (BO Santé 2011/9 of 10/15/2011) relating to the system for storing and distributing potassium iodide tablets outside the areas covered by a specific plan intervention (PPI)
RADIATION PROTECTION	CIR 2010-04-21 (DGT/ASN 04) (BO Travail 2010/5 of 05/30/2010) relating to measures to prevent risks of exposure to ionizing radiation
RADIATION PROTECTION	CIR 2008-01-18 (DGT/ASN 1) (BO Travail 2009/2 of 28/02/2009) relating to the order of 15 May 2006 relating to the conditions for the delimitation and signage of supervised and controlled areas and areas specially regulated or prohibited taking into account exposure to ionizing radiation, as well as the health, safety and maintenance rules imposed thereon
RADIATION PROTECTION	CIR 2005-12-23 (DGSNR/DHOS/DDSC/2005/1390) (not published) relating to the principles of intervention in the event of an event likely to lead to a radiological emergency situation outside of situations covered by an emergency plan or intervention
RADIATION PROTECTION	CIR 2005-08-11 (DGSNR/DDSC DEP-SD7 2005-249) (unpublished) preventive distribution of stable iodine tablets
RADIATION PROTECTION	CIR 2005-07-11 (BO Environment 2005/19 of 10/15/2005) relating to professional activities using raw materials naturally containing radionuclides - Implementation of the provisions of the order of May 25, 2005
RADIATION PROTECTION	CIR 2005-02-08 (DGSNR/DDSC DEP-SD7 2005-46) (BO Santé 05/02 of 03/15/2005) preventive distribution of stable iodine tablets
RADIATION PROTECTION	CIR 2002-05-02 (DHOS/HFD/DGSNR/277) (BO Santé 2002/23 of 09/06/2002) relating to the organization of medical care in the event of a nuclear or radiological accident
RADIATION PROTECTION	CIR 2000-05-17 (DGS/2000/262) (BO Santé 2000/22 of 04/06/2000) relating to the missions of the decentralized services of the Ministry of Employment and Solidarity in the distribution of tablets of iodine

Document Reference	Description
RADIATION PROTECTION	CIR 1997-04-30 + INS 1997-04-10 (not published) distribution and provision of stable iodine to residents near nuclear installations, modified by CIR 2000-04-10
RADIATION PROTECTION	RD 2006-09-22 (OJ of 29/09/2006) relating to the dosimetric information to be included in a report of an act using ionizing radiation
RADIATION PROTECTION	RD 2006-05-15 (Official Journal of 06/15/2006) relating to the conditions for the delimitation and signage of supervised and controlled areas and specially regulated or prohibited areas taking into account exposure to ionizing radiation, as well as the rules of hygiene, safety and maintenance which are imposed there
RADIATION PROTECTION	AR 2006-03-10 (OJ of 22/03/2006) relating to the information of the populations taken pursuant to article 9 of decree n° 2005-1158 of September 13, 2005
RADIATION PROTECTION	RD 2006-01-05 (Official Journal of 01/17/2006) relating to the public consultation on the draft special intervention plan for certain installations, taken pursuant to Article 8-II of Decree No. 2005- 1158 of September 13, 2005
RADIATION PROTECTION	RD 2005-12-08 (OJ of 13/12/2005) relating to the control of medical aptitude, radiological monitoring and training or information actions for the benefit of the personnel involved in the management of a situation of radiological emergency
RADIATION PROTECTION	RD 2005-11-04 (Official Journal of 22/11/2005) relating to informing the population in the event of a radiological emergency
RADIATION PROTECTION	RD 2005-10-26 (OJ of 23/11/2005) relating to the procedures for training the competent person in radiation protection and certification of the trainer, last amended by RD 2007-12-21 (OJ of 28/12/2007)
RADIATION PROTECTION	RD 2004-12-30 (OJ of 31/12/2004) relating to the individual medical monitoring card and individual dosimetry information for workers exposed to ionizing radiation
RADIATION PROTECTION	RD 2004-01-09 (Official Journal of 07/02/2004) defining the procedures for approving bodies responsible for radiation protection checks pursuant to article R. 1333-44 of the public health code (repealed by RD 2011-12-01)
RADIATION PROTECTION	RD 2003-12-06 (Official Journal of 07/01/2004) relating to the conditions for issuing the certificate and approval for organizations in charge of individual monitoring of worker exposure to ionizing radiation, amended by RD 2007-12-21 (OJ of 28/12/2007)
RADIATION PROTECTION	AR 2003-09-01 (OJ of 13/11/2003) defining the methods for calculating effective doses and equivalent doses resulting from the exposure of people to ionizing radiation
RADIATION PROTECTION	Royal Decree 2002-12-20 (JO of 28/12/2002) setting the national reference guide relating to radiological risks, modified by Royal Decree 2006-12-20 (JO of 31/12/2006)

Document Reference	Description
RADIATION PROTECTION	AR 2001-11-30 (OJ of 14/12/2001) relating to the implementation of an emergency alert system around a basic nuclear installation equipped with a specific intervention plan
RADIATION PROTECTION	Public Health Code Book III: Protection of health and the environment Title III: Prevention of health risks related to the environment and work (Chapter III: Ionizing radiation)
REJECTS	Decree No. 95-540 of 4 May 1995 relating to discharges of liquid and gaseous effluents and water withdrawals from basic nuclear installations
REJECTS	Order of 26 November 1999 setting the general technical requirements relating to the limits and methods of sampling and discharges subject to authorization, carried out by basic nuclear installations
REJECTS	RFS 1982-01-18 (V.1.a) determination of the activity released outside the fuel to be taken into account in safety studies relating to accidents
REJECTS	DIR 2005-11-29 (OJ of 01/12/2005) relating to the performance and processing of measurements of radioactivity in the environment in the event of an event resulting in a radiological emergency situation
REJECTS	DEC 2011-12-15 (CODEP-DEU-2011-066374) (BO ASN of 21/12/2011) of the Nuclear Safety Authority extending the approval of environmental radioactivity measurement laboratories
REJECTS	DEC 2011-12-15 (CODEP-DEU-2011-066345) (BO ASN of 21/12/2011) of the Nuclear Safety Authority extending the approval of environmental radioactivity measurement laboratories
REJECTS	DEC 2011-06-15 (CODEP-DEU-2011-031833) (BO ASN of 06/23/2011) of the Nuclear Safety Authority extending the approval of environmental radioactivity measurement laboratories
REJECTS	DEC 2011-06-15 (CODEP-DEU-2011-031794) (BO ASN of 23/06/2011) of the Nuclear Safety Authority extending the approval of environmental radioactivity measurement laboratories
REJECTS	DEC 2011-06-15 (CODEP-DEU-2011-031763) (BO ASN of 06/23/2011) of the Nuclear Safety Authority approving environmental radioactivity measurement laboratories
REJECTS	DEC 2010-12-15 (CODEP-DEU-2010-066536) (BO ASN of 29/12/2010) of the Nuclear Safety Authority approving environmental radioactivity measurement laboratories
REJECTS	DEC 2010-06-15 (CODEP-DEU-2010-031543) (BO ASN of 06/17/2010) of the Nuclear Safety Authority approving environmental radioactivity measurement laboratories
REJECTS	DEC 2009-12-08 (DEP-DEU-0704-2009) (BO ASN of 23/12/2009) of the Nuclear Safety Authority approving environmental radioactivity measurement laboratories
REJECTS	RD 2009-11-20 (Official Journal of 18/12/2009) approving decision no. 2009-DC-0153 of the Nuclear Safety Authority of 18 August 2009 relating to intervention levels in a radiological emergency situation

Document Reference	Description
REJECTS	AR 2008-07-08 (Official Journal of 08/09/2008 + amended Official Journal of 02/07/2009) approving decision 2008-DC-0099 of the Nuclear Safety Authority of April 29, 2008 on the organization of the national network measurements of environmental radioactivity and setting the procedures for the approval of laboratories, taken pursuant to the provisions of Articles R. 1333-11 and R. 1333-11-1 of the Public Health Code
REJECTS	RD 2007-03-23 (OJ of 03/28/2007) relating to the technical characteristics of the national alert signal
REJECTS	AR 2007-02-12 (Official Journal of 03/17/2007) relating to the conditions that must be met by laboratories carrying out water monitoring samples and analyses pursuant to articles R. 1321-24 and R. 1322-44 of the code public health
REJECTS	AR 2006-08-11 (Official Journal of 09/24/2006) fixing the list of laboratories approved by the minister responsible for the environment and by the minister responsible for health for environmental radioactivity measurements
REJECTS	RD 2005-01-24 (OJ of 02/22/2005) relating to the conditions for the approval of laboratories for the performance of samples and analyses of the sanitary control of water, last amended by RD 2006-12-30 (OJ of 01/16/2007)
SECURITY AND PROTECTION OF FISSILE MATERIALS	REG 2005-02-08 (302/2005/EURATOM) (OJ L 54 of 28/02/2005) relating to the application of Euratom security screening
SECURITY AND PROTECTION OF FISSILE MATERIALS	REC 2009-02-11 (2009/120/EURATOM) (OJ L 41 of 12/02/2009) on the implementation of the system of accountancy and control of nuclear materials by operators of nuclear installations
SECURITY AND PROTECTION OF FISSILE MATERIALS	D 1992-02-03 (92-110) (Official Journal of 05/02/1992) publishing the convention on the physical protection of nuclear materials, opened for signature in Vienna and New York on March 3, 1980 (set of two Appendices)
SECURITY AND PROTECTION OF FISSILE MATERIALS	RD 2011-06-10 (OJ of 06/07/2011) relating to the physical protection of facilities housing nuclear materials whose possession is subject to a license
SECURITY AND PROTECTION OF FISSILE MATERIALS	RD 2011-06-09 (OJ of 07/07/2011) setting the conditions for implementing the physical monitoring and accounting of nuclear materials whose possession is subject to a license
SECURITY AND PROTECTION OF FISSILE MATERIALS	RD 2011-05-31 (Official Journal of 03/07/2011) relating to physical monitoring, accounting and physical protection measures applicable to nuclear materials subject to a declaration as well as the form and methods of the statement
SECURITY AND PROTECTION OF FISSILE MATERIALS	RD 2004-03-16 (OJ of 03/30/2004 + Corrigendum JO of 04/17/2004) setting the technical conditions for the monitoring and accounting of nuclear materials
EARTHQUAKE	RFS 2001-05-31 (2001-01) determination of the seismic risk for the safety of surface basic nuclear installations

Document Reference	Description
SOURCES	AR 2009-10-23 (OJ of 01/16/2010) approving decision no. 2009-DC-0150 of July 16, 2009 of the Nuclear Safety Authority defining the technical criteria on which the extension of the duration is based use of sealed radioactive sources granted under article R. 1333-52 of the public health code
SOURCES	AR 2008-10-30 (Official Journal of 11/20/2008) approving decision no. 2008-DC-0109 of the Nuclear Safety Authority of August 19, 2008 relating to the detailed content of the information that must be attached to applications distribution authorization (suppliers), import or export within the framework of the distribution of radionuclides or devices containing them or renewal of these authorizations
SOURCES	RD 2005-05-25 (OJ of 06/01/2005) relating to professional activities using raw materials naturally containing radionuclides not used because of their radioactive properties
MEDICAL MONITORING	RD 1997-05-28 (OJ of 06/01/1997) relating to the content of the specific training of occupational physicians responsible for the medical supervision of workers from outside companies working in basic nuclear installations
NUCLEAR TRANSPORT	REG 1993-06-08 (1493/93/EURATOM) (OJEC L 148 of 19/06/1993) concerning transfers of radioactive substances between Member States
NUCLEAR TRANSPORT	D 2007-11-02 (2007-1557) (Official Journal of 11/03/2007) relating to basic nuclear installations and the control, in terms of nuclear safety, of the transport of radioactive substances, last amended by D 2012- 05-02 (2012-616) (OJ of 04/05/2012)
NUCLEAR TRANSPORT	RD 2011-09-09 (Official Journal of 12/10/2011) relating to the conditions for approval of means of transport of category I and II nuclear materials
NUCLEAR TRANSPORT	RD 2010-08-18 (OJ of 03/09/2010) relating to the protection and control of nuclear materials during transport

Appendix L Czech Republic major nuclear regulations

Table 66: Czech Republic major nuclear regulations

Document Reference	Description
Act No. 263/2016 Coll.	Atomic act
Decree No. 358/2016 Coll.	Requirements for assurance of quality and technical safety and assessment and verification of conformity of selected equipment
Decree No. 359/2016 Coll.	Details of ensuring radiation extraordinary event management
Decree No. 360/2016 Coll.	Radiation situation monitoring
Decree No. 361/2016 Coll.	Security of nuclear installation and nuclear material
Decree No. 362/2016 Coll.	Conditions for the award of the grant from the state budget in some existing exposure situations
Decree No. 374/2016 Coll.	Accountancy and control of nuclear materials and reporting of information on them
Decree No. 375/2016 Coll.	Selected items in the nuclear area
Decree No. 376/2016 Coll.	Dual-use items in the nuclear area
Decree No. 377/2016 Coll.	Requirements for the safe management of radioactive waste and on the decommissioning of nuclear installations or category III or IV workplaces
Decree No. 378/2016 Coll.	Siting of a nuclear installation
Decree No. 379/2016 Coll.	Approval of some products in the field of peaceful use of nuclear energy and ionising radiation and the carriage of radioactive or fissile material
Decree No. 408/2016 Coll.	Management system requirements
Decree No. 409/2016 Coll.	Activities especially important from nuclear safety and radiation protection viewpoint, special professional qualification and training of persons ensuring radiation protection of the registrant
Decree No. 422/2016 Coll.	Radiation protection and security of a radioactive source
Decree No. 21/2017 Coll.	Assuring nuclear safety of a nuclear installation
Decree No. 162/2017 Coll.	Requirements for safety assessment according to the atomic act
Decree No. 329/2017 Coll.	Requirements for nuclear installation design

Appendix M Excel files from Appendices I & J

Code	Part	Book	Title	Chapter	Requirements	Project SCO2-4-NPP	Directive 2014/68/UE	Directive 2014/30/UE	Directive 2014/35/UE	Directive 2006/42/CE	Directive 2009/104/CE	Directive 90/269/CEE	Directive 92/58/CEE	Directive 98/24/CE	Directive 2004/37/CE	Directive 2003/10/CE	Directive 2013/35/UE	Directive 2002/44/CE	Directive 90/270/CEE	Règlement REACH 1907/2006	Directive 2006/66/CE	Directive 2011/65/UE	Directive 2012/19/UE	Directive 2008/98/CE	Règlement (UE) 2019/1021
Travail	IV	I	II		Titre II : Principes généraux de prévention	X																			
Travail	IV	I	II	I	Chapitre Ier : Obligations de l'employeur. (Articles L4121-1 à L4121-5)																				
Travail	IV	I	IV	I	Titre IV : Information et formation des travailleurs	X																			
Travail	IV	I	IV	I	Chapitre Ier : Obligation générale d'information et de formation. (Articles L4141-1 à L4141-4)																				
Travail	IV	I	IV	II	Chapitre II : Formations et mesures d'adaptation particulières. (Articles L4142-1 à L4142-4)																				
Travail	IV	I	V		Titre VI : Dispositions relatives à la prévention des effets de l'exposition à certains facteurs de risques professionnels et au compte professionnel de prévention	X																			
Travail	IV	I	VI	I	Chapitre Ier : Facteurs de risques professionnels (Article L4161-1)	X						X		X		X									
Travail	IV	II	II		OBLIGATIONS DE L'EMPLOYEUR POUR L'UTILISATION DES LIEUX DE TRAVAIL																				
Travail	IV	II	II	I	Chapitre Ier : Dispositions générales (Article R4221-1)																				
Travail	IV	II	II	II	Chapitre II : Aération, assainissement (Articles R4222-1 à R4222-26)	X																			
Travail	IV	II	II	III	Section 1 Éclairage (Articles R4223-1 à R4223-12)	X																			
Travail	IV	II	II	III	Section 2 Ambiance thermique (Articles R4223-13 à R4223-15)	X																			
Travail	IV	II	II	IV	Chapitre IV : Sécurité des lieux de travail	X																			
Travail	IV	II	II	IV	Section 1 Caractéristiques des lieux de travail (Articles 4224-1 à R4224-8)	X																			
Travail	IV	II	II	IV	Section 4 Maintenance, entretien et vérifications (Articles 4224-17 à R4224-19)																				
Travail	IV	II	II	IV	Section 5 Signalisation et matérialisation relatives à la santé et à la sécurité (Articles 4224-20 à R4224-24)	X							X												
Travail	IV	II	II	V	Chapitre V : Aménagement des postes de travail	X																			

Code	Part	Book	Title	Chapter	Requirements	Project SCO2-4-NPP	Directive 2014/68/UE	Directive 2014/30/UE	Directive 2014/35/UE	Directive 2006/42/CE	Directive 2009/104/CE	Directive 90/269/CEE	Directive 92/58/CEE	Directive 98/24/CE	Directive 2004/37/CE	Directive 2003/10/CE	Directive 2013/35/UE	Directive 2002/44/CE	Directive 90/270/CEE	Règlement REACH 1907/2006	Directive 2006/66/CE	Directive 2011/65/UE	Directive 2012/19/UE	Directive 2008/98/CE	Règlement (UE) 2019/1021
Travail	IV	II	II	V	Section 1 Postes de travail extérieurs (Article R4225-1)																				
Travail	IV	II	II	V	Sous-section 1 Mise à disposition de boissons (Article R4225-2 à R4225-4)																				
Travail	IV	II	II	V	Sous-section 2 Mise à disposition de sièges (Article R4225-5)																				
Travail	IV	II	II	V	Section 3 Travailleurs handicapés (Article R4225-6 et R4225-7)																				
Travail	IV	II	II	VII	Chapitre VII : Risques d'incendies et d'explosions et évacuation																				
Travail	IV	II	II	VII	Section 1 Champ d'application (Article R4227-1à R4227-3)																				
Travail	IV	II	II	VII	Section 2 Dégagements (Article R4227-4 et R4227-14)																				
Travail	IV	II	II	VII	Section 3 Chauffage des locaux (Article R4227-15 à R4227-20)																				
Travail	IV	II	II	VII	Section 4 Emploi et stockage de matières explosives et inflammables (Article R4227-21à R4227-27)																				
Travail	IV	II	II	VII	Section 5 Moyens de prévention et de lutte contre l'incendie (Article R4227-28 à R4227-41)																				
Travail	IV	II	II	VII	Section 6 Prévention des explosions (Articles R4227-42 à R4227-54)																				
Travail	IV	II	II	VIII	Chapitre VIII : Installations sanitaires, restauration et hébergement																				
Travail	IV	II	II	VIII	Section 1 Installations sanitaires (Article R4228-1 à R4228-18)																				
Travail	IV	II	II	VIII	Section 2 Restauration et repos (Article R4228-19 à R4228-25)																				
Travail	IV	II	II	VIII	Section 3 Hébergement (Article R4228-26 à R4228-37)																				
Travail	IV	III	I		SANTÉ ET SÉCURITÉ AU TRAVAIL, CONCEPTION ET MISE SUR LE MARCHÉ DES ÉQUIPEMENTS DE TRAVAIL ET DES MOYENS DE PROTECTION	X																			

Code	Part	Book	Title	Chapter	Requirements	Project SCO2-4-NPP	Directive 2014/68/UE	Directive 2014/30/UE	Directive 2014/35/UE	Directive 2006/42/CE	Directive 2009/104/CE	Directive 90/269/CEE	Directive 92/58/CEE	Directive 98/24/CE	Directive 2004/37/CE	Directive 2003/10/CE	Directive 2013/35/UE	Directive 2002/44/CE	Directive 90/270/CEE	Règlement REACH 1907/2006	Directive 2006/66/CE	Directive 2011/65/UE	Directive 2012/19/UE	Directive 2008/98/CE	Règlement (UE) 2019/1021
Travail	IV	III	I	I	Chapitre Ier : Règles générales	X				X															
Travail	IV	III	I	I	Section 1 : Définitions et champs d'application	X				X															
Travail	IV	III	I	I	Sous-section 1 : Dispositions communes (Articles R4311-1 à R4311-3)	X				X															
Travail	IV	III	I	I	Sous-section 2 : Equipements de travail obéissant à des règles pour la mise sur le marché (Article R4311-4 à R4311-7)	X	X	X	X	X															
Travail	IV	III	I	I	Sous-section 3 : Equipements de protection individuelle (Articles R4311-8 à R4311-11)																				
Travail	IV	III	I	I	Section 2 : Dispositions d'application (Articles R4311-12 à R4311-16)	X				X															
Travail	IV	III	I	II	Chapitre II : Règles techniques de conception	X				X															
Travail	IV	III	I	II	Section 1 : Équipements de travail (Articles R4312-1 à R4312-5)	X				X															
Travail	IV	III	I	II	Section 2 : Équipements de protection individuelle (Article R4312-6 à R4312-9)																				
Travail	IV	III	I	III	Chapitre III : Procédures de certification de conformité	X				X															
Travail	IV	III	I	III	Section 1 : Formalités préalables à la mise sur le marché (Articles R4313-1 à R4313-18)	X				X															
Travail	IV	III	I	III	Section 2 : Les procédures d'évaluation de la conformité (Articles R4313-19 à R4313-74)	X				X															
Travail	IV	III	I	III	Section 3 : Les procédures d'évaluation de la conformité applicables à chaque catégorie de machines, équipements de travail ou d'équipements de protection individuelle (Articles R4313-75 à R4313-82)	X				X															
Travail	IV	III	I	III	Section 4 : Organismes notifiés (Articles R4313-83 à R4313-89)	X				X															
Travail	IV	III	I	III	Section 5 : Communication à l'autorité administrative et mesures de contrôle (Articles R4313-90 à R4313-95)	X				X															

Code	Part	Book	Title	Chapter	Requirements	Project SCO2-4-NPP	Directive 2014/68/UE	Directive 2014/30/UE	Directive 2014/35/UE	Directive 2006/42/CE	Directive 2009/104/CE	Directive 90/269/CEE	Directive 92/58/CEE	Directive 98/24/CE	Directive 2004/37/CE	Directive 2003/10/CE	Directive 2013/35/UE	Directive 2002/44/CE	Directive 90/270/CEE	Règlement REACH 1907/2006	Directive 2006/66/CE	Directive 2011/65/UE	Directive 2012/19/UE	Directive 2008/98/CE	Règlement (UE) 2019/1021
Travail	IV	III	I	IV	Chapitre IV : Procédure de sauvegarde (Articles R4314-1 à R4314-5)	X				X															
Travail	IV	III	I	IV	Article Annexe I à l'article R4312-1	X				X															
Travail	IV	III	I	IV	Article Annexe II à l'article R4312-6																				
Travail	IV	III	II		SANTÉ ET SÉCURITÉ AU TRAVAIL, UTILISATION DES ÉQUIPEMENTS DE TRAVAIL ET DES MOYENS DE PROTECTION	X																			
Travail	IV	III	II	I	Chapitre Ier : Règles générales (Article R4321-1à R4321-6)	X	X	X	X	X	X														
Travail	IV	III	II	II	Chapitre II : Maintien en état de conformité (Articles R4322-1à R4322-3)	X	X				X														
Travail	IV	III	II	III	Chapitre III : Mesures d'organisation et conditions d'utilisation des équipements de travail et des équipements de protection individuelle	X																			
Travail	IV	III	II	III	Section 1 Information et formation des travailleurs (Articles R4323-1 à R4323-5)	X					X														
Travail	IV	III	II	III	Section 2 Installation des équipements de travail (Articles R4323-6 à R4323-13)	X					X														
Travail	IV	III	II	III	Section 3 Utilisation et maintenance des équipements de travail (Articles R4323-14 à R4323-21)	X					X														
Travail	IV	III	II	III	Section 4 Vérifications des équipements de travail (Articles R4323-22 à R4323-28)																				
Travail	IV	III	II	III	Section 5 Dispositions particulières applicables aux équipements de travail servant au levage de charges (Articles R4323-29 à R4323-49)					X	X														
Travail	IV	III	II	III	Section 6 Dispositions particulières applicables aux équipements de travail mobiles (Articles R4323-50 à R4323-54)					X	X														

Code	Part	Book	Title	Chapter	Requirements	Project SCO2-4-NPP	Directive 2014/68/UE	Directive 2014/30/UE	Directive 2014/35/UE	Directive 2006/42/CE	Directive 2009/104/CE	Directive 90/269/CEE	Directive 92/58/CEE	Directive 98/24/CE	Directive 2004/37/CE	Directive 2003/10/CE	Directive 2013/35/UE	Directive 2002/44/CE	Directive 90/270/CEE	Règlement REACH 1907/2006	Directive 2006/66/CE	Directive 2011/65/UE	Directive 2012/19/UE	Directive 2008/98/CE	Règlement (UE) 2019/1021
Travail	IV	III	II	III	Section 7 Autorisation de conduite pour l'utilisation de certains équipements de travail mobiles ou servant au levage de charges (Articles R4323-55 à R4323-57)						X														
Travail	IV	III	II	III	Section 8 Dispositions particulières applicables à l'exécution de travaux temporaires en hauteur et à certains équipements de travail utilisés à cette fin (Articles R4323-58 à R4323-90)						X														
Travail	IV	III	II	III	Section 9 Dispositions particulières pour l'utilisation des équipements de protection individuelle (Articles R4323-91 à R4323-106)						X														
Travail	IV	III	II	IV	Chapitre IV : Utilisation des équipements de travail non soumis à des règles de conception lors de leur première mise sur le marché	X																			
Travail	IV	III	II	IV	Section 1 Prescriptions techniques communes (Articles R4324-1 à R4324-23)	X					X														
Travail	IV	III	II	IV	Section 2 Prescriptions complémentaires pour le levage de charges et le levage et le déplacement des travailleurs (Articles R4324-24 à R4324-29)						X														
Travail	IV	III	II	IV	Section 3 Prescriptions complémentaires pour les équipements de travail mobiles (Articles R4324-30 à R4324-45)						X														
Travail	IV	IV	I		RISQUES CHIMIQUES	X																			
Travail	IV	IV	I	I	Chapitre Ier : Mise sur le marché des substances et mélanger (Articles R4411-1 à R4411-86)	X														X					
Travail	IV	IV	I	I	Section 4 Protection des utilisateurs et acheteurs	X																			
Travail	IV	IV	I	I	Sous-section 2 Fiche de données de sécurité (R4411-73)	X								X	X					X					
Travail	IV	IV	I	I	Sous-section 4 : Dispositions d'urgence (Articles R4411-83 à R4411-84)										X										
Travail	IV	IV	I	II	Chapitre II : Mesures de prévention des risques chimiques	X								X											

Code	Part	Book	Title	Chapter	Requirements	Project SCO2-4-NPP	Directive 2014/68/UE	Directive 2014/30/UE	Directive 2014/35/UE	Directive 2006/42/CE	Directive 2009/104/CE	Directive 90/269/CEE	Directive 92/58/CEE	Directive 98/24/CE	Directive 2004/37/CE	Directive 2003/10/CE	Directive 2013/35/UE	Directive 2002/44/CE	Directive 90/270/CEE	Règlement REACH 1907/2006	Directive 2006/66/CE	Directive 2011/65/UE	Directive 2012/19/UE	Directive 2008/98/CE	Règlement (UE) 2019/1021
Travail	IV	IV	I	II	Section 1 Dispositions applicables aux agents chimiques dangereux	X								X											
Travail	IV	IV	I	II	Sous-section 1 Champ d'application et définitions (Articles R4412-1 à R4412-4)	X								X											
Travail	IV	IV	I	II	Sous-section 2 : Évaluation des risques (Articles R4412-5 à R4412-10)	X								X											
Travail	IV	IV	I	II	Sous-section 3 : Mesures et moyens de prévention (Articles R4412-11 à R4412-22)	X								X											
Travail	IV	IV	I	II	Sous-section 4 : Vérifications des installations et appareils de protection collective (Articles R4412-23 à R4412-26)									X											
Travail	IV	IV	I	II	Sous-section 5 : Contrôle de l'exposition									X											
Travail	IV	IV	I	II	Paragraphe 1 : Contrôle des valeurs limites d'exposition professionnelle (Articles R4412-27 à R4412-31)	X								X											
Travail	IV	IV	I	II	Paragraphe 2 : Contrôle des valeurs limites biologiques (Article R4412-32)	X								X											
Travail	IV	IV	I	II	Sous-section 6 Mesures en cas d'accident ou d'incident (Articles R4412-33 à R4412-37)									X											
Travail	IV	IV	I	II	Sous-section 7 Information et formation des travailleurs (Articles R4412-38 à R4412-39)									X											
Travail	IV	IV	I	II	Sous-section 8 : Suivi de l'état de santé des travailleurs									X											
Travail	IV	IV	I	II	Paragraphe 2 : Suivi individuel de l'état de santé									X											
Travail	IV	IV	I	II	Sous-paragraphe 1 : Suivi individuel et examens complémentaires (Articles R4412-44 à R4412-53)									X											
Travail	IV	IV	I	II	Sous-paragraphe 2 : Dossier médical (Articles R4412-54 à R4412-57)									X											
Travail	IV	IV	I	II	Section 2 Dispositions particulières aux agents chimiques dangereux cancérogènes, mutagènes et toxiques pour la reproduction	X																			
Travail	IV	IV	I	II	Sous-section 1 Champ d'application et définitions (Articles R4412-59 à R4412-60)	X									X										

Code	Part	Book	Title	Chapter	Requirements	Project SCO2-4-NPP	Directive 2014/68/UE	Directive 2014/30/UE	Directive 2014/35/UE	Directive 2006/42/CE	Directive 2009/104/CE	Directive 90/269/CEE	Directive 92/58/CEE	Directive 98/24/CE	Directive 2004/37/CE	Directive 2003/10/CE	Directive 2013/35/UE	Directive 2002/44/CE	Directive 90/270/CEE	Règlement REACH 1907/2006	Directive 2006/66/CE	Directive 2011/65/UE	Directive 2012/19/UE	Directive 2008/98/CE	Règlement (UE) 2019/1021
					Sous-section 2 : Évaluation des risques (Articles R4412-61 à R4412-65)	X									X										
Travail	IV	IV	I	II	Sous-section 3 Mesures et moyens de prévention (Articles R4412-66 à R4412-75)	X									X										
Travail	IV	IV	I	II	Sous-section 4 : Contrôle de l'exposition										X										
Travail	IV	IV	I	II	Paragraphe 1 : Contrôle des valeurs limites d'exposition professionnelle (Articles R4412-76 à R4412-80)										X										
Travail	IV	IV	I	II	Paragraphe 2 : Contrôle des valeurs limites biologiques (Article R4412-82)										X										
Travail	IV	IV	I	II	Sous-section 5 Mesures en cas d'accidents ou d'incidents (Articles R4412-83 à R4412-85)										X										
Travail	IV	IV	I	II	Sous-section 6 Information et formation des travailleurs (Articles R4412-86 à R4412-93)										X										
Travail	IV	IV	I	II	Section 3 Risques d'exposition à l'amiante										X										
Travail	IV	IV	I	II	Sous-section 1 Champ d'application et définitions (Articles R4412-94 à R4412-96)																				
Travail	IV	IV	I	II	Sous-section 2 Dispositions communes à toutes les opérations comportant des risques d'exposition à l'amiante (Articles R4412-97 à R4412-120)										X										
Travail	IV	IV	I	II	Paragraphe 8 Traitement des déchets (Articles R4412-121 à R4412-123)																				
Travail	IV	IV	I	II	Sous-section 3 Dispositions spécifiques aux travaux d'encapsulage et de retrait d'amiante ou d'articles en contenant (Articles R4412-125 à R4412-143)																				
Travail	IV	IV	I	II	Sous-section 4 Dispositions particulières aux interventions sur des matériaux, des équipements, des matériels ou des articles susceptibles de provoquer l'émission de fibres d'amiante (Articles R4412-144 à R4412-148)																				
Travail	IV	IV	I	II	Section 4 Règles particulières à certains agents chimiques dangereux (Articles R4412-149 à R4412-160)	X								X											

Code	Part	Book	Title	Chapter	Requirements	Project SCO2-4-NPP	Directive 2014/68/UE	Directive 2014/30/UE	Directive 2014/35/UE	Directive 2006/42/CE	Directive 2009/104/CE	Directive 90/269/CEE	Directive 92/58/CEE	Directive 98/24/CE	Directive 2004/37/CE	Directive 2003/10/CE	Directive 2013/35/UE	Directive 2002/44/CE	Directive 90/270/CEE	Règlement REACH 1907/2006	Directive 2006/66/CE	Directive 2011/65/UE	Directive 2012/19/UE	Directive 2008/98/CE	Règlement (UE) 2019/1021
Travail	IV	IV	II		PRÉVENTION DES RISQUES BIOLOGIQUES																				
Travail	IV	IV	II	I	Chapitre Ier : Dispositions générales (Articles R4421-1 à R4421-4)																				
Travail	IV	IV	II	II	Chapitre II : Principes de prévention (Article R4422-1)																				
Travail	IV	IV	II	III	Chapitre III : Évaluation des risques (Articles R4423-1 à R4423-4)																				
Travail	IV	IV	II	IV	Section 1 Dispositions communes à toutes les activités (Articles R4424-1 à R4424-6)																				
Travail	IV	IV	II		Section 2 Dispositions particulières à certaines activités (Articles R4424-7 à R4424-10)																				
Travail	IV	IV	II	V	Chapitre V : Information et formation des travailleurs (Articles R4425-1 à R4425-7)																				
Travail	IV	IV	II	VI	Chapitre VI : Suivi individuel de l'état de santé des travailleurs (Articles R4426-1 à R4426-13)																				
Travail	IV	IV	III		PRÉVENTION DES RISQUES D'EXPOSITION AU BRUIT	X																			
Travail	IV	IV	III	I	Chapitre Ier : Dispositions générales (Article R4431-1)	X										X									
Travail	IV	IV	III	I	Section 2 Valeurs limites d'exposition professionnelle (Articles R4431-2 à R4431-4)	X										X									
Travail	IV	IV	III	II	Chapitre II : Principes de prévention (Articles R4432-1 à R4432-3)	X										X									
Travail	IV	IV	III	III	Chapitre III : Évaluation des risques (Articles R4433-1 à R4433-7)	X										X									
Travail	IV	IV	III	IV	Chapitre IV : Mesures et moyens de prévention (Articles R4434-1 à R4434-10)	X										X									
Travail	IV	IV	III	V	Chapitre V : Surveillance médicale (Articles R4435-1 à R4435-4)																				
Travail	IV	IV	III	VI	Chapitre VI : Information et formation des travailleurs (Article R4436-1)																				
Travail	IV	IV	III	VII	Chapitre VII : Dispositions dérogatoires (Articles R4437-1 à R4437-4)																				

Code	Part	Book	Title	Chapter	Requirements	Project SCO2-4-NPP	Directive 2014/68/UE	Directive 2014/30/UE	Directive 2014/35/UE	Directive 2006/42/CE	Directive 2009/104/CE	Directive 90/269/CEE	Directive 92/58/CEE	Directive 98/24/CE	Directive 2004/37/CE	Directive 2003/10/CE	Directive 2013/35/UE	Directive 2002/44/CE	Directive 90/270/CEE	Règlement REACH 1907/2006	Directive 2006/66/CE	Directive 2011/65/UE	Directive 2012/19/UE	Directive 2008/98/CE	Règlement (UE) 2019/1021
Travail	IV	IV	IV		PRÉVENTION DES RISQUES D'EXPOSITION AUX VIBRATIONS MÉCANIQUES	X																			
Travail	IV	IV	IV	I	Chapitre Ier : Dispositions générales (Articles R4441-1 à R4441-2)	X										X		X							
Travail	IV	IV	IV	II	Chapitre II : Principes de prévention (Articles R4442-1 à R4442-2)	X										X		X							
Travail	IV	IV	IV	III	Chapitre III : Valeurs limites d'exposition (Articles R4443-1 à R4443-2)	X										X		X							
Travail	IV	IV	IV	IV	Chapitre IV : Évaluation des risques (Articles R4444-1 à R4444-7)	X										X		X							
Travail	IV	IV	IV	V	Chapitre V : Mesures et moyens de prévention (Articles R4445-1 à R4445-6)	X										X		X							
Travail	IV	IV	IV	VI	Chapitre VI : Suivi individuel de l'état de santé (Articles R4446-1 à R4446-4)													X							
Travail	IV	IV	IV	VII	Chapitre VII : Information et formation des travailleurs (Article R4447-1)													X							
Travail	IV	IV	V	I	PRÉVENTION DES RISQUES D'EXPOSITION AUX RAYONNEMENTS																				
Travail	IV	IV	V	I	Chapitre Ier : Prévention des risques d'exposition aux rayonnements ionisants																				
Travail	IV	IV	V	I	Section 1 : Champ d'application (Articles R4451-1 à R4451-4)																				
Travail	IV	IV	V	I	Section 2 : Principes de prévention (Article R4451-5)																				
Travail	IV	IV	V	I	Section 3 : Valeurs limites et niveau de référence (Articles R4451-6 à R4451-12)																				
Travail	IV	IV	V	I	Section 4 : Evaluation des risques (Articles R4451-13 à R4451-17)																				
Travail	IV	IV	V	I	Section 5 : Mesures et moyens de prévention (Articles R4451-18 à R4451-39)																				

Code	Part	Book	Title	Chapter	Requirements	Project SCO2-4-NPP	Directive 2014/68/UE	Directive 2014/30/UE	Directive 2014/35/UE	Directive 2006/42/CE	Directive 2009/104/CE	Directive 90/269/CEE	Directive 92/58/CEE	Directive 98/24/CE	Directive 2004/37/CE	Directive 2003/10/CE	Directive 2013/35/UE	Directive 2002/44/CE	Directive 90/270/CEE	Règlement REACH 1907/2006	Directive 2006/66/CE	Directive 2011/65/UE	Directive 2012/19/UE	Directive 2008/98/CE	Règlement (UE) 2019/1021
Travail	IV	IV	V	I	Section 6 : Vérification de l'efficacité des moyens de prévention (Articles R4451-40 à R4451-51)																				
Travail	IV	IV	V	I	Section 7 : Conditions d'emploi des travailleurs (Articles R4451-52 à R4451-57)																				
Travail	IV	IV	V	I	Section 8 : Information et formation des travailleurs (Articles R4451-58 à R4451-63)																				
Travail	IV	IV	V	I	Section 9 : Surveillance de l'exposition individuelle des travailleurs (Articles R4451-64 à R4451-81)																				
Travail	IV	IV	V	I	Section 10 : Suivi de l'état de santé des travailleurs (Articles R4451-82 à R4451-88)																				
Travail	IV	IV	V	I	Section 11 : Exposition exceptionnelle (Articles R4451-89 à R4451-95)																				
Travail	IV	IV	V	I	Section 12 : Situation d'urgence radiologique (Articles R4451-96 à R4451-110)																				
Travail	IV	IV	V	I	Section 13 : Organisation de la radioprotection (Article R4451-126)																				
Travail	IV	IV	V	I	Section 14 : Missions de l'Institut de radioprotection et de sûreté nucléaire (Articles R4451-127 à R4451-134)																				
Travail	IV	IV	V	I	Section 15 : Autres systèmes de contrôle (Article R4451-135)																				
Travail	IV	IV	V	II	PRÉVENTION DES RISQUES D'EXPOSITION AUX RAYONNEMENTS OPTIQUES ARTIFICIELS																				
Travail	IV	IV	V	II	Section 1 : Définitions (Articles R4451-1)																				
Travail	IV	IV	V	II	Section 2 : Principes de prévention (Articles R4452-2 à R4451-4)																				
Travail	IV	IV	V	II	Section 3 : Valeurs limites d'exposition professionnelle (Articles R4452-5 à R4451-6)																				
Travail	IV	IV	V	II	Section 4 : Evaluation des risques (Articles R4452-7 à R4451-12)																				

Code	Part	Book	Title	Chapter	Requirements	Project SCO2-4-NPP	Directive 2014/68/UE	Directive 2014/30/UE	Directive 2014/35/UE	Directive 2006/42/CE	Directive 2009/104/CE	Directive 90/269/CEE	Directive 92/58/CEE	Directive 98/24/CE	Directive 2004/37/CE	Directive 2003/10/CE	Directive 2013/35/UE	Directive 2002/44/CE	Directive 90/270/CEE	Règlement REACH 1907/2006	Directive 2006/66/CE	Directive 2011/65/UE	Directive 2012/19/UE	Directive 2008/98/CE	Règlement (UE) 2019/1021
Travail	IV	IV	V	II	Section 5 : Mesures et moyens de prévention (Articles R4452-13 à R4451-18)																				
Travail	IV	IV	V	II	Section 6 : Information et formation des travailleurs (Articles R4452-19 à R4451-21)																				
Travail	IV	IV	V	II	Section 7 : Suivi des travailleur et suivi individuel de l'état de santé (Articles R4452-22 à R4451-31)																				
Travail	IV	IV	V	II	Annexes (Articles Annexe I à Annexe III)												X								
Travail	IV	IV	V	III	PREVENTION DES RISQUES D'EXPOSITION AUX CHAMPS ELECTROMAGNETIQUES	X											X								
Travail	IV	IV	V	III	Section 1 : Définitions (Article R4453-1)	X											X								
Travail	IV	IV	V	III	Section 2 : Principes de prévention (Article R4453-2)	X											X								
Travail	IV	IV	V	III	Section 3 : Valeurs limites (Articles R4453-3 à R4453-5)	X											X								
Travail	IV	V	V	III	Section 4 : Evaluation des risques (Articles R4453-6 à R4453-12)	X											X								
Travail	IV	V	V	III	Section 5 : Mesures et moyens de prévention (Articles R4453-13 à R4453-16)	X											X								
Travail	IV	V	V	III	Section 6 : Information et formation des travailleurs (Articles R4453-17 à R4453-18)																				
Travail	IV	V	V	III	Section 7 : Suivi de l'état de santé des travailleurs (Article R4453-19)																				
Travail	IV	V	V	III	Section 8 : Dispositions particulières encadrant le dépassement des valeurs limites d'exposition relatives aux effets sensoriels (Articles R4453-20 à R4453-26)																				
Travail	IV	V	V	III	Section 9 : Dispositions particulières applicables aux équipements d'imagerie par résonance magnétique destinés aux soins des patients dans le secteur de la santé ou à la recherche dans ce domaine encadrant le dépassement des valeurs limites d'exposition relatives aux effets sur la santé (Articles R4453-27 à R4453-34)																				
Travail	IV	IV	VI		AUTRES RISQUES	X																			

Code	Part	Book	Title	Chapter	Requirements	Project SCO2-4-NPP	Directive 2014/68/UE	Directive 2014/30/UE	Directive 2014/35/UE	Directive 2006/42/CE	Directive 2009/104/CE	Directive 90/269/CEE	Directive 92/58/CEE	Directive 98/24/CE	Directive 2004/37/CE	Directive 2003/10/CE	Directive 2013/35/UE	Directive 2002/44/CE	Directive 90/270/CEE	Règlement REACH 1907/2006	Directive 2006/66/CE	Directive 2011/65/UE	Directive 2012/19/UE	Directive 2008/98/CE	Règlement (UE) 2019/1021
Travail	IV	IV	VI	II	PREVENTION DU RISQUE PYROTECHNIQUE																				
Travail	IV	IV	VI	II	Section 1 : Champ d'application et définitions (Articles R4462-1 à R4462-2)																				
Travail	IV	IV	VI	II	Section 2 : L'étude de sécurité (Articles R4462-2 à R4462-5)																				
Travail	IV	IV	VI	II	Section 3 : Mesures générales de sécurité (Articles R4462-6 à R4462-9)																				
Travail	IV	IV	VI	II	Section 4 : Implantation des installations et transports internes Sous-section 1 : Implantation des installations et des postes de travail (Articles R4462-10 à R4462-13)																				
Travail	IV	IV	VI	II	Section 4 : Implantation des installations et transports internes Sous-section 2 : Transports de substances ou d'objets explosifs internes au site (Articles R4462-14 à R4462-15)																				
Travail	IV	IV	VI	II	Section 5 : Exigences de sécurité concernant les installations Sous-section 1 : Caractéristiques générales (Articles R4462-16 à R4462-17)																				
Travail	IV	IV	VI	II	Section 5 : Exigences de sécurité concernant les installations Sous-section 2 : Issues et dégagements (Articles R4462-18 à R4462-22)																				
Travail	IV	IV	VI	II	Section 5 : Exigences de sécurité concernant les installations Sous-section 3 : Installations électriques et précaution contre l'électricité statique (Articles R4462-23 à R4462-25)																				

Code	Part	Book	Title	Chapter	Requirements	Project SCO2-4-NPP	Directive 2014/68/UE	Directive 2014/30/UE	Directive 2014/35/UE	Directive 2006/42/CE	Directive 2009/104/CE	Directive 90/269/CEE	Directive 92/58/CEE	Directive 98/24/CE	Directive 2004/37/CE	Directive 2003/10/CE	Directive 2013/35/UE	Directive 2002/44/CE	Directive 90/270/CEE	Règlement REACH 1907/2006	Directive 2006/66/CE	Directive 2011/65/UE	Directive 2012/19/UE	Directive 2008/98/CE	Règlement (UE) 2019/1021
Travail	IV	IV	VI	II	Section 6 : Encadrement et formation (Articles R4462-26 à R4462-28)																				
Travail	IV	IV	VI	II	Section 7 : Dispositions administratives (Articles R4462-29 à R4462-36)																				
Travail	IV	V	IV		AUTRES ACTIVITÉS ET OPERATIONS.	X																			
Travail	IV	V	IV	I	Chapitre Ier : Manutention des charges (Articles R4541-1 à R4541-11, hors R4541-9)	X						X													
Travail	IV	V	IV	I	Chapitre Ier : Manutention des charges (Articles R4541-9)	X																			
Travail	IV	V	IV	II	Chapitre II : Utilisation d'écrans de visualisation (Articles R4542-1 à R4542-19)	X													X						
Travail	IV	V	IV	IV	Chapitre IV : Opérations sur les installations électriques ou dans leur voisinage																				
Travail	IV	V	IV	IV	Section 1 : Champ d'application et définitions (Articles R4544-1 à R4544-3)																				
Travail	IV	V	IV	IV	Section 2 : Obligations générales de l'employeur (Article R4544-4)																				
Travail	IV	V	IV	IV	Section 3 : Prescriptions particulières (Article R4544-5 à R4544-8)																				
Travail	IV	V	IV	IV	Section 4 : Travailleurs autorisés à effectuer des opérations sur les installations électriques ou dans leur voisinage (Article R4544-9 à R4544-10)																				
ENVIRONNEMENT																									
Environnement		II			MILIEUX PHYSIQUES																				
Environnement		II	I	I	Titre Ier : Eau et milieux aquatiques et marins																				
Environnement		II	I	I	Chapitre Ier : Régime général et gestion de la ressource																				
Environnement		II	I	I	Section 1 : Gestion de la ressource																				
Environnement		II	I	I	Sous-section 1 : Dispositions à caractère général (Articles R211-1 à R211-9)																				
Environnement		II	I	I	Sous-section 2 : Objectifs de qualité (Articles D211-10 à D211-11)																				

Code	Part	Book	Title	Chapter	Requirements	Project SCO2-4-NPP	Directive 2014/68/UE	Directive 2014/30/UE	Directive 2014/35/UE	Directive 2006/42/CE	Directive 2009/104/CE	Directive 90/269/CEE	Directive 92/58/CEE	Directive 98/24/CE	Directive 2004/37/CE	Directive 2003/10/CE	Directive 2013/35/UE	Directive 2002/44/CE	Directive 90/270/CEE	Règlement REACH 1907/2006	Directive 2006/66/CE	Directive 2011/65/UE	Directive 2012/19/UE	Directive 2008/98/CE	Règlement (UE) 2019/1021
Environnement		II	I	I	Sous-section 3 : Programme national d'action contre la pollution des milieux aquatiques par certaines substances dangereuses (Articles R211-11-1 à R211-11-3)																				
Environnement		II	I	I	Sous-section 4 : Contrôle des caractéristiques des eaux réceptrices et des déversements (Articles R211-12 à R211-21)																				
Environnement		II	I	I	Section 2 : Déversements susceptibles d'altérer la qualité de l'eau et de porter atteinte aux milieux aquatiques																				
Environnement		II	I	I	Sous-section 4 : Huiles, lubrifiants et détergents																				
Environnement		II	I	I	Paragraphe 1 : Huiles et lubrifiants. (Articles R211-60 à R211-62)																				
Environnement		II	I	I	Paragraphe 2 : Détergents. (Article R211-63)																				
Environnement		II	II	IV	Titre II : Air et atmosphère																				
Environnement		II	II	IV	Chapitre IV : Mesures techniques nationales de prévention de la pollution atmosphérique et d'utilisation rationnelle de l'énergie																				
Environnement		II	II	IV	Section 1 : Véhicules automobiles																				
Environnement		II	II	IV	Sous-section 2 : Moteurs des engins mobiles non routiers (Article R224-7 à R224-14)																				
Environnement		II	II	IV	Section 2 : Biens mobiliers autres que les véhicules automobiles																				
Environnement		II	II	IV	Sous-section 1 : Installations fixes d'incinération, de combustion ou de chauffage (Articles R224-16 à R224-19)																				
Environnement		II	II	IV	Sous-section 2 : Rendements, équipement et contrôle des chaudières (Article R224-20)																				

Code	Part	Book	Title	Chapter	Requirements	Project SCO2-4-NPP	Directive 2014/68/UE	Directive 2014/30/UE	Directive 2014/35/UE	Directive 2006/42/CE	Directive 2009/104/CE	Directive 90/269/CEE	Directive 92/58/CEE	Directive 98/24/CE	Directive 2004/37/CE	Directive 2003/10/CE	Directive 2013/35/UE	Directive 2002/44/CE	Directive 90/270/CEE	Règlement REACH 1907/2006	Directive 2006/66/CE	Directive 2011/65/UE	Directive 2012/19/UE	Directive 2008/98/CE	Règlement (UE) 2019/1021
Environnement		II	II	IV	Sous-section 4 : Réduction des émissions de composés organiques volatils dues à l'utilisation de solvants organiques dans certains vernis et peintures et dans les produits de retouche de véhicules (Articles R224-48 à R224-59)																				
Environnement		II	II	IV	Sous-section 5 : Inspection des systèmes de climatisation et des pompes à chaleur réversibles d'une puissance frigorifique nominale supérieure à 12 kilowatts (Articles R224-59-1 à R224-59-11)																				
Environnement		II	II	IV	Section 3 : Biens immobiliers (Article R224-60)																				
Environnement		II	II	IV	Section 4 : Produits ayant un impact sur la consommation d'énergie (Article R224-61 à R224-68)																				
Environnement		V	II	I	Titre II : Produits chimiques, biocides et substances à l'état nanoparticulaire	X																			X
Environnement		V	II	I	Chapitre Ier : Contrôle des produits chimiques	X																			
Environnement		V	II	I	Section 1 : Dispositions générales (Article R521-1)	X														X					
Environnement		V	II	I	Sous-section 1 : Prélèvements, analyses et essais (Articles R521-2 à R521-2-10)	X														X					
Environnement		V	II	I	Sous-section 2 : Protection du secret de la formule intégrale des mélanges (Article D521-2-11)	X														X					
Environnement		V	II	I	Sous-section 3 : Modalités d'application des sanctions administratives (Articles R521-2-12 à R521-2-13)	X														X					
Environnement		V	II	I	Sous-section 4 : Sanctions pénales (Articles R521-2-14 à R521-2-16)	X														X					
Environnement		V	II	I	Section 2 : Mise sur le marché et emploi de certains produits et substances	X														X		X			
Environnement		V	II	I	Sous-section 1 : Produits phytopharmaceutiques. (Article R521-3)																				
Environnement		V	II	I	Sous-section 2 : Substances et mélanges dangereux	X																			

Code	Part	Book	Title	Chapter	Requirements	Project SCO2-4-NPP	Directive 2014/68/UE	Directive 2014/30/UE	Directive 2014/35/UE	Directive 2006/42/CE	Directive 2009/104/CE	Directive 90/269/CEE	Directive 92/58/CEE	Directive 98/24/CE	Directive 2004/37/CE	Directive 2003/10/CE	Directive 2013/35/UE	Directive 2002/44/CE	Directive 90/270/CEE	Règlement REACH 1907/2006	Directive 2006/66/CE	Directive 2011/65/UE	Directive 2012/19/UE	Directive 2008/98/CE	Règlement (UE) 2019/1021
Environnement		V	II	I	Paragraphe 1 : Dispositions propres aux substances et mélanges dangereux pour la santé (Article R521-4)	X														X					
Environnement		V	II	I	Paragraphe 2 : Autres produits contenant des composés du mercure, des composés d'arsenic ou des composés organostanniques (Articles R521-13 à R521-17)	X														X					
Environnement		V	II	I	Sous-section 5 : Gaz à effet de serre fluorés utilisés comme agent extincteur dans les systèmes de protection contre les incendies, comme diélectrique dans les appareils de commutation électrique ou comme solvant (Articles R521-54 à R521-55)																				
Environnement		V	II	I	Paragraphe 1 : Dispositions générales (Article R521-56)																				
Environnement		V	II	I	Paragraphe 2 : Cession, acquisition et récupération des gaz à effet de serre fluorés (Articles R521-57 à R521-58)																				
Environnement		V	II	I	Paragraphe 3 : Dispositions relatives aux certifications et aux agréments (Articles R521-59 à R521-61)																				
Environnement		V	II	I	Paragraphe 4 : Dispositions relatives aux entreprises (Articles R521-62 à R521-65)																				
Environnement		V	II	I	Paragraphe 5 : Dispositions particulières aux gaz à effet de serre fluorés utilisés comme diélectrique dans les appareillages de connexion à haute tension ou comme solvant (Article R521-66)																				
Environnement		V	II	I	Paragraphe 6 : Sanctions pénales (Articles R521-67 à R521-68)																				
Environnement		V	II	I	Sous-section 6 : Gaz à effet de serre fluorés de la catégorie des hydrofluorocarbures (HFC) y compris les hydrofluoroléfines (HFO) Dispositions communes à tous les usages (Articles R521-69 à R521-71)																				

Code	Part	Book	Title	Chapter	Requirements	Project SCO2-4-NPP	Directive 2014/68/UE	Directive 2014/30/UE	Directive 2014/35/UE	Directive 2006/42/CE	Directive 2009/104/CE	Directive 90/269/CEE	Directive 92/58/CEE	Directive 98/24/CE	Directive 2004/37/CE	Directive 2003/10/CE	Directive 2013/35/UE	Directive 2002/44/CE	Directive 90/270/CEE	Règlement REACH 1907/2006	Directive 2006/66/CE	Directive 2011/65/UE	Directive 2012/19/UE	Directive 2008/98/CE	Règlement (UE) 2019/1021
Environnement		V	II	II	Chapitre II : Approbation des substances actives biocides et autorisation de mise à disposition sur le marché des produits biocides															x					
Environnement		V	II	II	Section 1 : Dispositions générales (Articles R522-1 à R522-2)															x					
Environnement		V	II	II	Section 2 : Exemptions dans l'intérêt de la défense nationale (Article R522-3)															x					
Environnement		V	II	II	Section 3 : Approbation et renouvellement de l'approbation des substances actives biocides (Article R522-4)															x					
Environnement		V	II	II	Section 4 : Autorisation de mise à disposition sur le marché des produits biocides															x					
Environnement		V	II	II	Sous-section 1 : Autorisation de mise à disposition sur le marché des produits biocides à l'exception de ceux utilisés à des fins de recherche et de développement (Articles R522-5 à R522-12)															x					
Environnement		V	II	II	Sous-section 2 : Autorisation de mise à disposition sur le marché des produits biocides à des fins de recherche et de développement (Articles R522-13 à R522-14)															x					
Environnement		V	II	II	Sous-section 3 : Mesures individuelles d'interdiction, de restriction ou d'application de prescriptions particulières pour la mise sur le marché, la détention ou l'utilisation d'un produit biocide (Article R522-15)															x					x
Environnement		V	II	II	Section 5 : Dispositions applicables à la vente, l'application et l'utilisation de certains groupes de produits biocides(Articles R522-16 à R522-17)															x					x
Environnement		V	II	II	Section 6 : Déclaration des produits biocides (Articles R522-18 à R522-22)															x					
Environnement		V	II	II	Section 7 : Dispositions communes aux approbations de substances actives biocides et aux autorisations de produits biocides (Articles R522-23 à R522-24)															x					

Code	Part	Book	Title	Chapter	Requirements	Project SCO2-4-NPP	Directive 2014/68/UE	Directive 2014/30/UE	Directive 2014/35/UE	Directive 2006/42/CE	Directive 2009/104/CE	Directive 90/269/CEE	Directive 92/58/CEE	Directive 98/24/CE	Directive 2004/37/CE	Directive 2003/10/CE	Directive 2013/35/UE	Directive 2002/44/CE	Directive 90/270/CEE	Règlement REACH 1907/2006	Directive 2006/66/CE	Directive 2011/65/UE	Directive 2012/19/UE	Directive 2008/98/CE	Règlement (UE) 2019/1021
Environnement		V	II	II	Section 8 : Sanctions pénales (Article R522-25)															X					
Environnement		V	II	III	Chapitre III : Dispositions communes aux produits chimiques et biocides	X																			X
Environnement		V	II	III	Section 1 : Autorités compétentes pour la mise en oeuvre des règlements communautaires															X					X
Environnement		V	II	III	Sous-section 1 : Evaluation et contrôle des risques présentés par les substances existantes (Article R523-1)															X					X
Environnement		V	II	III	Sous-section 2 : Exportations et importations de certains produits chimiques dangereux (Article R523-2)															X					X
Environnement		V	II	III	Sous-section 3 : Substances qui appauvrissent la couche d'ozone (Article R523-3)	X																			
Environnement		V	II	III	Section 2 : Commission des produits chimiques et biocides (Articles D523-4 à D523-7)	X														X					
Environnement		V	II	III	Section 3 : Groupe interministériel des produits chimiques (Articles D523-8 à D523-11)																				
Environnement		V	II	III	Chapitre IV : Prévention des risques pour la santé et l'environnement résultant de l'exposition aux substances à l'état nanoparticulaire (Articles R523-12 à D523-22)	X														X					X
Environnement		V	IV	I	Titre IV : Déchets.	X																			
Environnement		V	IV	I	Chapitre Ier : Dispositions générales relatives à l'élimination des déchets	X																		X	
Environnement		V	IV	I	Section 1 : Dispositions générales	X																		X	
Environnement		V	IV	I	Sous-section 1 : Conseil national des déchets (Articles D541-1 à D541-6-3)																				
Environnement		V	IV	I	Sous-section 2 : Classification des déchets (Articles R541-7 à R541-11-1)	X																		X	
Environnement		V	IV	I	Sous-section 3 : Dispositions particulières aux groupements d'intérêt public (Article R541-12)																				

Code	Part	Book	Title	Chapter	Requirements	Project SCO2-4-NPP	Directive 2014/68/UE	Directive 2014/30/UE	Directive 2014/35/UE	Directive 2006/42/CE	Directive 2009/104/CE	Directive 90/269/CEE	Directive 92/58/CEE	Directive 98/24/CE	Directive 2004/37/CE	Directive 2003/10/CE	Directive 2013/35/UE	Directive 2002/44/CE	Directive 90/270/CEE	Règlement REACH 1907/2006	Directive 2006/66/CE	Directive 2011/65/UE	Directive 2012/19/UE	Directive 2008/98/CE	Règlement (UE) 2019/1021
Environnement		V	IV	I	Sous-section 4 : Mélange de déchets (Articles D541-12-1 à D541-12-3)	X																		X	
Environnement		V	IV	I	Sous-section 5 : Sortie du statut de déchet (Articles D541-12-4 à D541-12-14)	X																		X	
Environnement		V	IV	I	Sous-Section 6 : Police administrative (Article R541-12-16)																				
Environnement		V	IV	I	Sous-section 7 : Signalétique commune des produits recyclables relevant d'une consigne de tri (Articles R541-12-17 à R541-12-18)																				
Environnement		V	IV	I	Section 2 : Plans de prévention et de gestion des déchets																				
Environnement		V	IV	I	Sous-section 1 : Plan régional de prévention et de gestion des déchets (Articles R541-13 à R541-27)	X																		X	
Environnement		V	IV	I	Sous-section 2 : Programmes locaux de prévention des déchets ménagers et assimilés (Articles R541-41-19 à R541-41-28)																				
Environnement		V	IV	I	Section 3 : Traitement des déchets (Articles R541-42 à R541-48)																				
Environnement		V	IV	I	Section 4 : Collecte, transport, négoce et courtage de déchets																				
Environnement		V	IV	I	Sous-section 1 : Dispositions générales (Article R541-49)	X																		X	
Environnement		V	IV	I	Paragraphe 1 : De la collecte et du transport des déchets (Articles R541-49-1 à R541-54)	X																		X	
Environnement		V	IV	I	Paragraphe 2 : Du négoce et du courtage des déchets (Articles R541-54-1 à R541-58)	X																		X	
Environnement		V	IV	I	Paragraphe 3 : Dispositions diverses (Articles R541-59 à R541-61)	X																		X	
Environnement		V	IV	I	Sous-section 2 : Collecte des déchets ménagers et assimilés (Article R541-61-1)																			X	

Code	Part	Book	Title	Chapter	Requirements	Project SCO2-4-NPP	Directive 2014/68/UE	Directive 2014/30/UE	Directive 2014/35/UE	Directive 2006/42/CE	Directive 2009/104/CE	Directive 90/269/CEE	Directive 92/58/CEE	Directive 98/24/CE	Directive 2004/37/CE	Directive 2003/10/CE	Directive 2013/35/UE	Directive 2002/44/CE	Directive 90/270/CEE	Règlement REACH 1907/2006	Directive 2006/66/CE	Directive 2011/65/UE	Directive 2012/19/UE	Directive 2008/98/CE	Règlement (UE) 2019/1021
Environnement		V	IV	I	Section 5 : Dispositions particulières aux mouvements transfrontaliers de déchets (Articles R541-62 à R541-64-4)																				
Environnement		V	IV	I	Section 7 : Dispositions pénales.																				
Environnement		V	IV	I	Sous-section 1 : Abandon d'ordures, déchets, matériaux ou autres objets (Article R541-76)																				
Environnement		V	IV	I	Sous-section 2 : Abandon d'épaves de véhicules ou d'ordures, déchets, matériaux et autres objets transportés dans un véhicule (Article R541-77)																				
Environnement		V	IV	I	Sous-section 3 : Contrôle des circuits de traitement des déchets (Article R541-78)																				
Environnement		V	IV	I	Sous-section 4 : Transport, opérations de courtage et de négoce (Article R541-79)																				
Environnement		V	IV	I	Sous-section 5 : Stockage de déchets inertes																				
Environnement		V	IV	I	Sous-section 6 : Transferts transfrontaliers de déchets (Articles R541-83 à R541-85)																				
Environnement		V	IV	I	Section 8 : Agrément des éco-organismes, approbation des systèmes individuels, contrôles périodiques et sanctions administratives																				
Environnement		V	IV	I	Sous-section 1 : Agrément des éco-organismes et approbation des systèmes individuels (Articles R541-86 à R541-87)																				
Environnement		V	IV	I	Sous-section 2 : Contrôles périodiques et sanctions administratives (Articles R541-88 à R541-94)																				
Environnement		V	IV	III	Chapitre III : Dispositions propres à certaines catégories de produits et de déchets (R)	X																		X	
Environnement		V	IV	III	Section 1 : Déchets d'activités de soins et assimilés. (Article R543-1)																				
Environnement		V	IV	III	Section 2 : Déchets d'exploitation et résidus des cargaisons des navires. (Article R543-2)																				

Code	Part	Book	Title	Chapter	Requirements	Project SCO2-4-NPP	Directive 2014/68/UE	Directive 2014/30/UE	Directive 2014/35/UE	Directive 2006/42/CE	Directive 2009/104/CE	Directive 90/269/CEE	Directive 92/58/CEE	Directive 98/24/CE	Directive 2004/37/CE	Directive 2003/10/CE	Directive 2013/35/UE	Directive 2002/44/CE	Directive 90/270/CEE	Règlement REACH 1907/2006	Directive 2006/66/CE	Directive 2011/65/UE	Directive 2012/19/UE	Directive 2008/98/CE	Règlement (UE) 2019/1021
Environnement		V	IV	III	Section 3 : Huiles usagées. (Articles R543-3 à R543-16)																			X	
Environnement		V	IV	III	Section 4 : Substances dites " PCB ". (Articles R543-17 à R543-19)																			X	
Environnement		V	IV	III	Sous-section 1 : Interdiction d'utilisation des PCB. (Articles R543-20 à R543-25)																				
Environnement		V	IV	III	Sous-section 2 : Caractérisation, étiquetage, déclaration et utilisation des appareils contenant des PCB (Articles R543-26 à R543-31)																				
Environnement		V	IV	III	Sous-section 3 : Décontamination et traitement des PCB																				
Environnement		V	IV	III	Paragraphe 1 : Dispositions générales. (Articles R543-32 à R543-33)																				
Environnement		V	IV	III	Paragraphe 2 : Conditions de délivrance des agréments. (Articles R543-34 à R543-36)																				
Environnement		V	IV	III	Paragraphe 3 : Droits et obligations du titulaire de l'agrément. (Articles R543-37 à R543-38)																				
Environnement		V	IV	III	Sous-section 4 : Dispositions diverses. (Articles R543-39 à R543-40)																				
Environnement		V	IV	III	Sous-section 5 : Dispositions pénales. (Article R543-41)																				
Environnement		V	IV	III	Section 5 : Emballages																			X	
Environnement		V	IV	III	Sous-section 1 : Prise en compte des exigences liées à l'environnement dans la conception et la fabrication des emballages. (Articles R543-42 à R543-52)																			X	
Environnement		V	IV	III	Sous-section 2 : Déchets d'emballages dont les détenteurs finaux sont les ménages. (Articles R543-53 à R543-65)																			X	
Environnement		V	IV	III	Sous-section 3 : Déchets d'emballages dont les détenteurs finaux ne sont pas les ménages. (Articles R543-66 à R543-72)																			X	
Environnement		V	IV	III	Sous-section 4 : Dispositions pénales. (Articles R543-73 à R543-74)																			X	

Code	Part	Book	Title	Chapter	Requirements	Project SCO2-4-NPP	Directive 2014/68/UE	Directive 2014/30/UE	Directive 2014/35/UE	Directive 2006/42/CE	Directive 2009/104/CE	Directive 90/269/CEE	Directive 92/58/CEE	Directive 98/24/CE	Directive 2004/37/CE	Directive 2003/10/CE	Directive 2013/35/UE	Directive 2002/44/CE	Directive 90/270/CEE	Règlement REACH 1907/2006	Directive 2006/66/CE	Directive 2011/65/UE	Directive 2012/19/UE	Directive 2008/98/CE	Règlement (UE) 2019/1021
Environnement		V	IV	III	Section 6 : Fluides frigorigènes utilisés dans les équipements frigorifiques et climatiques (Article R543-75)																				
Environnement		V	IV	III	Sous-section 1 : Dispositions générales. (Articles R543-76 à R543-77)																				
Environnement		V	IV	III	Sous-section 2 : Prévention des fuites de fluides frigorigènes. (Articles R543-78 à R543-83)																				
Environnement		V	IV	III	Sous-section 3 : Cession, acquisition et récupération des fluides frigorigènes et de leurs emballages. (Articles R543-84 à R543-98)																				
Environnement		V	IV	III	Sous-section 4 : Dispositions relatives aux opérateurs. (Articles R543-99 à R543-107)																				
Environnement		V	IV	III	Sous-section 5 : Dispositions relatives aux organismes agréés. (Articles R543-108 à R543-116)																				
Environnement		V	IV	III	Sous-section 5 : Dispositions diverses. (Articles R543-117 à R543-121)																				
Environnement		V	IV	III	Sous-section 6 : Dispositions pénales. (Articles R543-122 à R543-123)																				
Environnement		V	IV	III	Section 7 : Piles et accumulateurs	X																			
Environnement		V	IV	III	Sous-section 1 : Champ d'application et définitions (Articles R543-124 à R543-125)																X				
Environnement		V	IV	III	Sous-section 2 : Mise sur le marché des piles et accumulateurs (Articles R543-126 à R543-127)																X				
Environnement		V	IV	III	Sous-section 3 : Elimination des piles et accumulateurs usagés	X															X				
Environnement		V	IV	III	Paragraphe 1 : Piles et accumulateurs portables (Articles R543-128-1 à R543-128-4)	X															X				
Environnement		V	IV	III	Paragraphe 2 : Piles et accumulateurs automobiles (Articles R543-129-1 à R543-129-4)																X				
Environnement		V	IV	III	Paragraphe 3 : Piles et accumulateurs industriels (Articles R543-130-1 à R543-130-4)	X															X				

Code	Part	Book	Title	Chapter	Requirements	Project SCO2-4-NPP	Directive 2014/68/UE	Directive 2014/30/UE	Directive 2014/35/UE	Directive 2006/42/CE	Directive 2009/104/CE	Directive 90/269/CEE	Directive 92/58/CEE	Directive 98/24/CE	Directive 2004/37/CE	Directive 2003/10/CE	Directive 2013/35/UE	Directive 2002/44/CE	Directive 90/270/CEE	Règlement REACH 1907/2006	Directive 2006/66/CE	Directive 2011/65/UE	Directive 2012/19/UE	Directive 2008/98/CE	Règlement (UE) 2019/1021
Environnement		V	IV	III	Sous-section 4 : Traitement des piles et accumuluteurs usagés (Article R543-131)	X															X				
Environnement		V	IV	III	Sous-section 5 : Registre (Article R543-132)																X				
Environnement		V	IV	III	Sous-section 6 : Sanctions pénales (Articles R543-133 à R543-134)																X				
Environnement		V	IV	III	Section 8 : Déchets de pneumatiques (Articles R543-137 à R543-138)																				
Environnement		V	IV	III	Sous-section 1 : Gestion des déchets de pneumatiques (Articles R543-139 à R543-151)																				
Environnement		V	IV	III	Sous-section 2 : Dispositions pénales (Article R543-152)																				
Environnement				III	Sous-Section 3 : Sanctions administratives (Article R543-152-1)																				
Environnement		V	IV	III	Section 9 : Véhicules (Articles R543-153 à R543-155)																				
Environnement		V	IV	III	Sous-section 1 : Dispositions relatives à l'élimination des véhicules hors d'usage. (Articles R543-156 à R543-165)																				
Environnement		V	IV	III	Sous-section 2 : Dispositions relatives à la communication d'informations. (Articles R543-166 à R543-170)																				
Environnement		V	IV	III	Sous-section 3 : Dispositions pénales. (Article R543-171)																				
Environnement		V	IV	III	Section 10 : Equipements électriques et électroniques	X																			
Environnement		V	IV	III	Sous-section 1 : Dispositions relatives à la limitation de l'utilisation des substances dangereuses dans les équipements électriques et électroniques	X																X			
Environnement		V	IV	III	Paragraphe 1 : Champ d'application (Article R543-171-1)	X																X			
Environnement		V	IV	III	Paragraphe 2 : Définitions (Article R543-171-2)	X																X			
Environnement		V	IV	III	Paragraphe 3 : Limitation de l'utilisation de certaines substances dangereuses dans les équipements électriques et électroniques (Article R543-171-3)	X																X			
Environnement		V	IV	III	Paragraphe 4 : Obligations des fabricants (Articles R543-171-4 à R543-171-5)	X																X			

Code	Part	Book	Title	Chapter	Requirements	Project SCO2-4-NPP	Directive 2014/68/UE	Directive 2014/30/UE	Directive 2014/35/UE	Directive 2006/42/CE	Directive 2009/104/CE	Directive 90/269/CEE	Directive 92/58/CEE	Directive 98/24/CE	Directive 2004/37/CE	Directive 2003/10/CE	Directive 2013/35/UE	Directive 2002/44/CE	Directive 90/270/CEE	Règlement REACH 1907/2006	Directive 2006/66/CE	Directive 2011/65/UE	Directive 2012/19/UE	Directive 2008/98/CE	Règlement (UE) 2019/1021
Environnement		V	IV	III	Paragraphe 5 : Obligations des mandataires (Article R543-171-6)	X																X			
Environnement		V	IV	III	Paragraphe 6 : Obligations des importateurs (Article R543-171-7)	X																X			
Environnement		V	IV	III	Paragraphe 7 : Obligations des distributeurs (Article R543-171-8)	X																X			
Environnement		V	IV	III	Paragraphe 8 : Obligations imposées à l'ensemble des opérateurs économiques (Article R543-171-9)	X																X			
Environnement		V	IV	III	Paragraphe 9 : Attestation de conformité des équipements électriques et électroniques (Articles R543-171-10 à R543-171-11)	X																X			
Environnement		V	IV	III	Paragraphe 10 : Dispositions pénales (Article R543-171-12)	X																X			
Environnement		V	IV	III	Sous-section 2 : Dispositions relatives aux déchets d'équipement électrique et électronique	X																	X		
Environnement		V	IV	III	Paragraphe 1 : Dispositions générales (Articles R543-172 à R543-175)	X																	X		
Environnement		V	IV	III	Paragraphe 2 : Dispositions relatives à la conception des équipements électriques et électroniques (Articles R543-176 à R543-178)	X																	X		
Environnement		V	IV	III	Paragraphe 3 : Dispositions relatives à la collecte des déchets d'équipements électriques et électroniques ménagers (Articles R543-179 à R543-187)	X																	X		
Environnement		V	IV	III	Paragraphe 4 : Dispositions relatives à la gestion des déchets d'équipements électriques et électroniques	X																	X		
Environnement		V	IV	III	Sous-Paragraphe 1 : Enlèvement et traitement des déchets d'équipements électriques et électroniques ménagers. (Articles R543-188 à R543-193)	X																	X		

Code	Part	Book	Title	Chapter	Requirements	Project SCO2-4-NPP	Directive 2014/68/UE	Directive 2014/30/UE	Directive 2014/35/UE	Directive 2006/42/CE	Directive 2009/104/CE	Directive 90/269/CEE	Directive 92/58/CEE	Directive 98/24/CE	Directive 2004/37/CE	Directive 2003/10/CE	Directive 2013/35/UE	Directive 2002/44/CE	Directive 90/270/CEE	Règlement REACH 1907/2006	Directive 2006/66/CE	Directive 2011/65/UE	Directive 2012/19/UE	Directive 2008/98/CE	Règlement (UE) 2019/1021
Environnement		V	IV	III	Sous-Paragraphe 2 : Enlèvement et traitement des déchets d'équipements électriques et électroniques professionnels. (Articles R543-195 à R543-197-1)	X																	X		
Environnement		V	IV	III	Sous-Paragraphe 3 : Modalités de gestion des déchets d'équipement électriques et électroniques.(Articles R543-200 à R543-200-1)	X																	X		
Environnement		V	IV	III	Paragraphe 5 : Dispositions relatives au suivi et au contrôle (Articles R543-201 à R543-203)	X																	X		
Environnement		V	IV	III	Paragraphe 6 : Dispositions pénales (Articles R543-205 à R543-206)	X																	X		
Environnement		V	IV	III	Sous-section 3 : Exigences minimales applicables aux transferts transfrontaliers d'équipements électriques et électroniques usagés (Articles R543-206-1 à R543-206-4)	X																	X		
Environnement		V	VII	I	Lutte contre le bruit																				
Environnement		V	VII	I	Section 1 Emissions sonores des objets																				
Environnement		V	VII	I	Sous-section 1 : Dispositions générales (Articles R571-1 à R571-4)																				
Environnement		V	VII	I	Sous-section 2 : Procédures applicables (Articles R571-5 à R571-14)																				
Environnement		V	VII	I	Sous-section 3 : Contrôles (Articles R571-15 à R571-17)																				
Environnement		V	VII	I	Sous-section 4 : Agrément des organismes chargés des vérifications de conformité (Articles R571-18 à R571-23)																				
Environnement		V	VII	I	Sous-section 5 : Dispositions diverses																				

Line	N°	Type of text	Date	Publication date OJ	Title	Requirements	SUB01 : CHX Exchanger	SUB2 : DUHS exchanger	SUB3 : CO2 tanks	SUB4 : Turbomachine	SUB5 : Battery	SUB6 : Electrical Equipment	SUB7 : Electronic Components	Type of justification expected	Comments
1	R4541-9	French Labor Code	Version in force on March 01, 2020		Book V, Title IV, Chapter I : Handling of loads	Section 4 : Measures and means of prevention (Article R4541-9)	X	X	X	X	X	X	X	A et/ou M	
2	2009/104/EC	European directive	16-Sep-09	OJ L 260 du 3.10.2009, p. 5–19	Directive 2009/104/EC on minimum safety and health requirements for the use by workers at work of work equipment	1. Control systems	X	X		X		X	X	I et E	Provide electrical diagrams for analysis The control and command organ must be identified in French or by standardized pictograms
3	2009/104/EC	European directive	16-Sep-09	OJ L 260 du 3.10.2009, p. 5–19	Directive 2009/104/EC on minimum safety and health requirements for the use by workers at work of work equipment	2. Start-up organ	X	X		X		X	X	E	Provide electrical diagrams for analysis The control and command organ must be identified in French or by standardized pictograms
4	2009/104/EC	European directive	16-Sep-09	OJ L 260 du 3.10.2009, p. 5–19	Directive 2009/104/EC on minimum safety and health requirements for the use by workers at work of work equipment	3. Stop organ	X	X		X		X	X	E	Provide electrical diagrams for analysis The control and command organ must be identified in French or by standardized pictograms
5	2009/104/EC	European directive	16-Sep-09	OJ L 260 du 3.10.2009, p. 5–19	Directive 2009/104/EC on minimum safety and health requirements for the use by workers at work of work equipment	4. Emergency stop organ	X	X		X		X	X	E	See if it is necessary to integrate an emergency stop for the Project SCO2-4-NPP notammnet for motorized movements. Reminder: An emergency stop does not reduce the risk for users
6	2009/104/EC	European directive	16-Sep-09	OJ L 260 du 3.10.2009, p. 5–19	Directive 2009/104/EC on minimum safety and health requirements for the use by workers at work of work equipment	5. Falling / projecting objects	X	X	X	X	X	X	X	I et E	See installation instructions for Project SCO2-4-NPP See the instructions for the transport phases (rigging, slinging, lifting for the Project SCO2-4-NPP and the container)

Line	N°	Type of text	Date	Publication date OJ	Title	Requirements	SUB01 : CHX Exchanger	SUB2 : DUHS exchanger	SUB3 : CO2 tanks	SUB4 : Turbomachine	SUB5 : Battery	SUB6 : Electrical Equipment	SUB7 : Electronic Components	Type of justification expected	Comments
7	2009/104/EC	European directive	16-Sep-09	OJ L 260 du 3.10.2009, p. 5–19	Directive 2009/104/EC on minimum safety and health requirements for the use by workers at work of work equipment	6. Emissions of gases, vapors or liquids, or emissions of dust			X					I et/ou A	Only during shooting phases but does not depend directly on Project SCO2-4-NPP
8	2009/104/EC	European directive	16-Sep-09	OJ L 260 du 3.10.2009, p. 5–19	Directive 2009/104/EC on minimum safety and health requirements for the use by workers at work of work equipment	7. Stability	X	X	X	X	X	X	X	I	See installation instructions for Project SCO2-4-NPP Provide the calculation notes to justify the mechanical sizing and the assembly points
9	2009/104/EC	European directive	16-Sep-09	OJ L 260 du 3.10.2009, p. 5–19	Directive 2009/104/EC on minimum safety and health requirements for the use by workers at work of work equipment	8. Risks of rupture / bursting	X	X	X	X				A ou C	Provide the calculation notes to justify the mechanical sizing and the assembly points. Calculation hypotheses must take into account the firing phases Justify the hydraulic part (manual hydraulic pump, piping and hydraulic clamp) Provide supporting documentation for the ISO container
10	2009/104/EC	European directive	16-Sep-09	OJ L 260 du 3.10.2009, p. 5–19	Directive 2009/104/EC on minimum safety and health requirements for the use by workers at work of work equipment	9. Protection of moving parts	X	X		X				I et E	To see for the protection of moving elements by motorization (electric motor) Take into account the adjustment and maintenance phases
11	2009/104/EC	European directive	16-Sep-09	OJ L 260 du 3.10.2009, p. 5–19	Directive 2009/104/EC on minimum safety and health requirements for the use by workers at work of work equipment	10. Lighting								I	Sans objet

Line	N°	Type of text	Date	Publication date OJ	Title	Requirements	SUB01 : CHX Exchanger	SUB2 : DUHS exchanger	SUB3 : CO2 tanks	SUB4 : Turbomachine	SUB5 : Battery	SUB6 : Electrical Equipment	SUB7 : Electronic Components	Type of justification expected	Comments
12	2009/104/EC	European directive	16-Sep-09	OJ L 260 du 3.10.2009, p. 5–19	Directive 2009/104/EC on minimum safety and health requirements for the use by workers at work of work equipment	11. Risk of contact with very hot or very cold surfaces	X	X		X				I ou M	A priori, hot parts only after cannon fire See to insert warning in the user documentation
13	2009/104/EC	European directive	16-Sep-09	OJ L 260 du 3.10.2009, p. 5–19	Directive 2009/104/EC on minimum safety and health requirements for the use by workers at work of work equipment	12. Alert devices	X	X	X		X	X	X	I et/ou A	See if the Gun trial is equipped with alert devices if necessary
14	2009/104/EC	European directive	16-Sep-09	OJ L 260 du 3.10.2009, p. 5–19	Directive 2009/104/EC on minimum safety and health requirements for the use by workers at work of work equipment	13. Conditions of use	X	X	X	X	X	X	X	A et E	BHNP must provide user documentation in French
15	2009/104/EC	European directive	16-Sep-09	OJ L 260 du 3.10.2009, p. 5–19	Directive 2009/104/EC on minimum safety and health requirements for the use by workers at work of work equipment	14. Maintenance operations	X	X	X	X	X	X	X	A	BHNP must provide installation, maintenance and service documentation in french for the Trail Gun
16	2009/104/EC	European directive	16-Sep-09	OJ L 260 du 3.10.2009, p. 5–19	Directive 2009/104/EC on minimum safety and health requirements for the use by workers at work of work equipment	15. Consignment, separation of energy sources	X	X		X	X	X		A and E or I	The 230VAC or 400VAC power supply must be fitted with a disconnect switch or a removable plug to ensure the electrical separation function
17	2009/104/EC	European directive	16-Sep-09	OJ L 260 du 3.10.2009, p. 5–19	Directive 2009/104/EC on minimum safety and health requirements for the use by workers at work of work equipment	16.Warnings and signals	X	X	X	X	X	X	X	A et E ou I	Compliance with Directive 92/58 / EEC makes it possible to comply with this requirement
18	2009/104/EC	European directive	16-Sep-09	OJ L 260 du 3.10.2009, p. 5–19	Directive 2009/104/EC on minimum safety and health requirements for the use by workers at work of work equipment	17. Access			X					A and I	Justify the means of access with the technical prescriptions of norms NF EN ISO 14122 (1 to 4) Safety of machinery - Permanent means of access to machinery
19	2009/104/EC	European directive	16-Sep-09	OJ L 260 du 3.10.2009, p. 5–19	Directive 2009/104/EC on minimum safety and health requirements for the use by workers at work of work equipment	18. Risk of fire, gas, dust, liquids, vapors or other substances	X	X	X		X			I and A	The electrical circuit must be properly protected with fuses or circuit breakers
20	2009/104/EC	European directive	16-Sep-09	OJ L 260 du 3.10.2009, p. 5–19	Directive 2009/104/EC on minimum safety and health requirements for the use by workers at work of work equipment	19. Explosion risks								A ou C	Not applicable

Line	N°	Type of text	Date	Publication date OJ	Title	Requirements	SUB01 : CHX Exchanger	SUB2 : DUHS exchanger	SUB3 : CO2 tanks	SUB4 : Turbomachine	SUB5 : Battery	SUB6 : Electrical Equipment	SUB7 : Electronic Components	Type of justification expected	Comments
21	2009/104/EC	European directive	16-Sep-09	OJ L 260 du 3.10.2009, p. 5–19	Directive 2009/104/EC on minimum safety and health requirements for the use by workers at work of work equipment	20. Electrical contacts					X	X	X	I, A et E	The electrical part of the Project SCO2-4-NPP must not have accessible active undervoltage parts. The electrical boxes or components must have protection indices adapted to the environment in which the Project SCO2-4-NPP is used.
22	2009/104/EC	European directive	16-Sep-09	OJ L 260 du 3.10.2009, p. 5–19	Directive 2009/104/EC on minimum safety and health requirements for the use by workers at work of work equipment	21. Mobility risks - General								A ou C	Not applicable
23	2009/104/EC	European directive	16-Sep-09	OJ L 260 du 3.10.2009, p. 5–19	Directive 2009/104/EC on minimum safety and health requirements for the use by workers at work of work equipment	22. Mobility risks - Risk of flipping or overturning								A ou C ou I	Not applicable
24	2009/104/EC	European directive	16-Sep-09	OJ L 260 du 3.10.2009, p. 5–19	Directive 2009/104/EC on minimum safety and health requirements for the use by workers at work of work equipment	23. Mobility risks - Risks linked to displacement								I	Not applicable
25	2009/104/EC	European directive	16-Sep-09	OJ L 260 du 3.10.2009, p. 5–19	Directive 2009/104/EC on minimum safety and health requirements for the use by workers at work of work equipment	321. Strength and stability of work equipment used for lifting								A ou C	Not applicable
26	2009/104/EC	European directive	16-Sep-09	OJ L 260 du 3.10.2009, p. 5–19	Directive 2009/104/EC on minimum safety and health requirements for the use by workers at work of work equipment	322.Indications, marking, signage on lifting equipment.								A ou I	Not applicable
27	2009/104/EC	European directive	16-Sep-09	OJ L 260 du 3.10.2009, p. 5–19	Directive 2009/104/EC on minimum safety and health requirements for the use by workers at work of work equipment	333. Collisions								A et I	Not applicable
28	2009/104/EC	European directive	16-Sep-09	OJ L 260 du 3.10.2009, p. 5–19	Directive 2009/104/EC on minimum safety and health requirements for the use by workers at work of work equipment	4 Provisions concerning the use of work equipment made available for temporary work at height								A et I	Justify the means of access with the technical prescriptions of norms NF EN ISO 14122 (1 to 4) Safety of machinery - Permanent means of access to machinery

Line	N°	Type of text	Date	Publication date OJ	Title	Requirements	SUB01 : CHX Exchanger	SUB2 : DUHS exchanger	SUB3 : CO2 tanks	SUB4 : Turbomachine	SUB5 : Battery	SUB6 : Electrical Equipment	SUB7 : Electronic Components	Type of justification expected	Comments
29	90/269/EEC	European directive	29-May-90	OJ n°L 156 du 21.06.1990, p9-13	Directive on minimum safety and health requirements for the use by workers at work of work equipment	1. Equipment design recommendations	X	X	X	X	X	X	X	A	
30	90/269/EEC	European directive	29-May-90	OJ n°L 156 du 21.06.1990, p9-13	Directive on minimum safety and health requirements for the use by workers at work of work equipment	2. Information for handling loads	X	X	X	X	X	X	X	A	
31	92/58/EEC	European directive	24-Jun-92	OJ L 245 du 26.8.1992, p. 23–42	Directive on the minimum requirements for the provision of safety and/or health signs at work	ANNEX I 2. Signaling, in relation to a ban, a warning and an obligation, as well as that concerning the location and identification of rescue or rescue means, must be done permanently by signs.	X	X	X	X	X	X	X	I or A	To see indication or signaling for any residual risks
32	92/58/EEC	European directive	24-Jun-92	OJ L 245 du 26.8.1992, p. 23–42	Directive on the minimum requirements for the provision of safety and/or health signs at work	ANNEX I 2. Signaling for the location and identification of fire-fighting materials and equipment must be done permanently by signs and / or by the safety color.								I or A	Not applicable
33	92/58/EEC	European directive	24-Jun-92	OJ L 245 du 26.8.1992, p. 23–42	Directive on the minimum requirements for the provision of safety and/or health signs at work	ANNEX I 2. The risk of impact against obstacles and falling persons must be signaled permanently by a safety color and / or by signs.	X	X	X	X				I or A	Possibly to be seen for the risk of damage to the moving parts, especially if the users are near the Gun trial
34	92/58/EEC	European directive	24-Jun-92	OJ L 245 du 26.8.1992, p. 23–42	Directive on the minimum requirements for the provision of safety and/or health signs at work	ANNEX I 2. The report of dangerous events occurrences, the call to people for a specific action, as well as the emergency evacuation of people, must be done occasionally, and taking into account interchangeability and complementarity by a light signal, an acoustic signal and / or verbal communication.							X	I or A	To see if it is necessary to integrate warning lights or acoustic signal for the implementation of Project SCO2-4-NPP
35	2003/10/EC	European directive	06-Feb-03	OJ L 42 du 15.2.2003, p. 38–44	Directive on the minimum health and safety requirements regarding the exposure of workers to the risks arising from physical agents (noise)	1. Determination and assessment of risks (lower exposure values triggering action	X	X	X	X	X	X	X	A et M	The exposure of users to noise is notably linked to the firing phases and not linked to the functioning of the Project SCO2-4-NPP See to insert in the user documentation, a reminder for the possible wearing of hearing protection

Line	N°	Type of text	Date	Publication date OJ	Title	Requirements	SUB01 : CHX Exchanger	SUB2 : DUHS exchanger	SUB3 : CO2 tanks	SUB4 : Turbomachine	SUB5 : Battery	SUB6 : Electrical Equipment	SUB7 : Electronic Components	Type of justification expected	Comments
36	2013/35/EC	European directive	29-Jun-13	OJ L 159 du 30.4.2004, p. 1–26	Directive on the minimum health and safety requirements regarding the exposure of workers to the risks arising from physical agents (electromagnetic fields)	ANNEX II Non-thermal effects ANNEX III Thermal effects						X	X	A et M	For electrical or electronic equipment, apart from their compliance with the EMC directive, to our knowledge and following the guide of the European Commission concerning good practices for the risk of exposure to electromagnetic fields, this equipment does not require any additional assessment. NOTE: For equipment covered by the RED directive, ensure compliance with the declarations of conformity and the instructions or user manual specifying the conditions of use and implementation.
37	2002/44/CE	European directive			Directive 2002/44/EC on the minimum health and safety requirements regarding the exposure of workers to the risks arising from physical agents (vibrations		X	X	X	X		X	X		
38	90/270/CEE	European directive			Directive 90/270/EC on the minimum safety and health requirements for work with display screen equipment		X	X	X	X		X	X		

Line	N°	Type of text	Date	Publication date OJ	Title	Requirements	SUB01 : CHX Exchanger	SUB2 : DUHS exchanger	SUB3 : CO2 tanks	SUB4 : Turbomachine	SUB5 : Battery	SUB6 : Electrical Equipment	SUB7 : Electronic Components	Type of justification expected	Comments
1	2006/42/EC	European directive	17-May-06	OJ L 157 du 9.6.2006, p. 24–86	Machinery directive	Manufacturer must perform risk analysis	X	X	X	X	X	X	X	A	BHNP must perform risk analysis for the Project SCO2-4-NPP
2	2006/42/CE	European directive	17-May-06	OJ L 157 du 9.6.2006, p. 24–86	Machinery directive	1.1.2 Security Integration Principles	X	X	X	X	X	X	X	I and A	To be compliant, the Project SCO2-4-NPP must meet all the applicable requirements of the machinery directive See all comments on applicable requirements in this tab
3	2006/42/CE	European directive	17-May-06	OJ L 157 du 9.6.2006, p. 24–86	Machinery directive	1.1.3 Materials and products	X	X	X	X	X	X	X	A	For this point, refer to the tab "Danger. Prohibit. Materials" of this matrix
4	2006/42/CE	European directive	17-May-06	OJ L 157 du 9.6.2006, p. 24–86	Machinery directive	1.1.4 Lighting								I, A or M	Not applicable
5	2006/42/CE	European directive	17-May-06	OJ L 157 du 9.6.2006, p. 24–86	Machinery directive	1.1.5 Machine design for handling	X	X	X	X		X	X	A or M	The documentation of Project SCO2-4-NPP must indicate the masses of the main components and the type of handling (manual or mechanized)
6	2006/42/CE	European directive	17-May-06	OJ L 157 du 9.6.2006, p. 24–86	Machinery directive	1.1.6 Ergonomics	X	X	X	X		X	X	A, I and E	This point will be validated by the tests and the suitability of the Project SCO2-4-NPP for the planned operations.
7	2006/42/CE	European directive	17-May-06	OJ L 157 du 9.6.2006, p. 24–86	Machinery directive	1.1.7 Workplace								I	Not applicable
8	2006/42/CE	European directive	17-May-06	OJ L 157 du 9.6.2006, p. 24–86	Machinery directive	1.1.8 Seat								I	Not applicable
9	2006/42/CE	European directive	17-May-06	OJ L 157 du 9.6.2006, p. 24–86	Machinery directive	1.2.1 Safety and reliability of control systems	X	X		X		X	X	A et E	you must justify the Safety and reliability of control systems, in particular for the security functions
10	2006/42/CE	European directive	17-May-06	OJ L 157 du 9.6.2006, p. 24–86	Machinery directive	1.2.2 Service organ	X	X		X		X	X	I et E	The control and command organ must be identified in French or by standardized pictograms
11	2006/42/CE	European directive	17-May-06	OJ L 157 du 9.6.2006, p. 24–86	Machinery directive	1.2.3 Start-up	X	X		X		X	X	I et E	The control and command organ must be identified in French or by standardized pictograms

Line	N°	Type of text	Date	Publication date OJ	Title	Requirements	SUB01 : CHX Exchanger	SUB2 : DUHS exchanger	SUB3 : CO2 tanks	SUB4 : Turbomachine	SUB5 : Battery	SUB6 : Electrical Equipment	SUB7 : Electronic Components	Type of justification expected	Comments
12	2006/42/CE	European directive	17-May-06	OJ L 157 du 9.6.2006, p. 24–86	Machinery directive	1.2.4 Stop 1.2.4.1 Normal stop 1.2.4.2 Stoppage for service reasons 1.2.4.3 Emergency stop 1.2.4.4 Set of machines	X	X		X		X	X	I et E	The control and command organ must be identified in French or by standardized pictograms See if it is necessary to integrate an emergency stop for the Project SCO2-4-NPP notammnet for motorized movements. Reminder: An emergency stop does not reduce the risk for users
13	2006/42/CE	European directive	17-May-06	OJ L 157 du 9.6.2006, p. 24–86	Machinery directive	1.2.5 Selection of control or operating modes	X	X		X		X	X	E	Not applicable
14	2006/42/CE	European directive	17-May-06	OJ L 157 du 9.6.2006, p. 24–86	Machinery directive	1.2.6 Power supply failure	X	X		X		X	X	A et E	Provide electrical diagrams for analysis
15	2006/42/CE	European directive	17-May-06	OJ L 157 du 9.6.2006, p. 24–86	Machinery directive	1.3.1 Risk of loss of stability	X	X	X	X	X	X	X	I	See installation instructions for Project SCO2-4-NPP Provide the calculation notes to justify the mechanical sizing and the assembly points
16	2006/42/CE	European directive	17-May-06	OJ L 157 du 9.6.2006, p. 24–86	Machinery directive	1.3.2. Risk of break in service	X	X		X				A ou C	Provide the calculation notes to justify the mechanical sizing and the assembly points. Calculation hypotheses must take into account the firing phases Justify the hydraulic part (manual hydraulic pump, piping and hydraulic clamp) Provide supporting documentation for the ISO container
17	2006/42/CE	European directive	17-May-06	OJ L 157 du 9.6.2006, p. 24–86	Machinery directive	1.3.3 Risks due to falling, ejecting objects	X	X		X				I et E	See installation instructions for Project SCO2-4-NPP See the instructions for the transport phases (rigging, slinging, lifting for the Project SCO2-4-NPP and the container)
18	2006/42/CE	European directive	17-May-06	OJ L 157 du 9.6.2006, p. 24–86	Machinery directive	1.3.4. Risks due to surfaces, edges or angles	X	X	X	X	X	X	X	I	Only by inspection for this point
19	2006/42/CE	European directive	17-May-06	OJ L 157 du 9.6.2006, p. 24–86	Machinery directive	1.3.5. Risks due to combined machines									Not applicable
20	2006/42/CE	European directive	17-May-06	OJ L 157 du 9.6.2006, p. 24–86	Machinery directive	1.3.6 Risks due to variations in operating conditions								A et/ou I	Not applicable

Line	N°	Type of text	Date	Publication date OJ	Title	Requirements	SUB01 : CHX Exchanger	SUB2 : DUHS exchanger	SUB3 : CO2 tanks	SUB4 : Turbomachine	SUB5 : Battery	SUB6 : Electrical Equipment	SUB7 : Electronic Components	Type of justification expected	Comments
21	2006/42/CE	European directive	17-May-06	OJ L 157 du 9.6.2006, p. 24–86	Machinery directive	1.3.7. Risks related to moving parts	X	X		X				I	To see for the protection of moving elements by motorization (electric motor) Take into account the adjustment and maintenance phases Only by inspection for this point
22	2006/42/CE	European directive	17-May-06	OJ L 157 du 9.6.2006, p. 24–86	Machinery directive	1.3.8.Choice of protection against risks caused by moving parts	X	X		X				I	Only by inspection for this point
23	2006/42/CE	European directive	17-May-06	OJ L 157 du 9.6.2006, p. 24–86	Machinery directive	1.3.9 Risks due to movements not ordered	X	X		X				I	Provide electrical diagrams for analysis
24	2006/42/CE	European directive	17-May-06	OJ L 157 du 9.6.2006, p. 24–86	Machinery directive	1.4 Characteristics required for guards and protective devices 1.4.1 General requirements 1.4.2.2 Movable guards with locking device 1.4.2.3. Adjustable guards limiting access	X	X	X	X				I	Only by inspection for this point
25	2006/42/CE	European directive	17-May-06	OJ L 157 du 9.6.2006, p. 24–86	Machinery directive	1.4.3. Special requirements for protective devices								I et E	Not applicable
26	2006/42/CE	European directive	17-May-06	OJ L 157 du 9.6.2006, p. 24–86	Machinery directive	1.5.1 Electric power supply NOTE : When the machinery directive is applicable, the requirements relating to the low voltage directive are taken into account by this point (1.5.1 "Electricity power supply")						X		A et I	The electrical part of the Project SCO2-4-NPP must not have accessible active undervoltage parts. The electrical boxes or components must have protection indices adapted to the environment in which the Project SCO2-4-NPP is used. The electrical circuit must be properly protected with fuses or circuit breakers
27	2006/42/CE	European directive	17-May-06	OJ L 157 du 9.6.2006, p. 24–86	Machinery directive	1.5.2.Static electricity	X	X	X	X	X	X	X	A et I	Check equipotential connection (earth) for metal parts
28	2006/42/CE	European directive	17-May-06	OJ L 157 du 9.6.2006, p. 24–86	Machinery directive	1.5.3. Non-electric power supply			X					I, A et E ou C	Justify the hydraulic part (manual hydraulic pump, piping and hydraulic clamp)
29	2006/42/CE	European directive	17-May-06	OJ L 157 du 9.6.2006, p. 24–86	Machinery directive	1.5.4. Assembly errors	X	X	X	X	X	X	X	I ou A	See installation and maintenance instructions for Project SCO2-4-NPP

Line	N°	Type of text	Date	Publication date OJ	Title	Requirements	SUB01 : CHX Exchanger	SUB2 : DUHS exchanger	SUB3 : CO2 tanks	SUB4 : Turbomachine	SUB5 : Battery	SUB6 : Electrical Equipment	SUB7 : Electronic Components	Type of justification expected	Comments
30	2006/42/CE	European directive	17-May-06	OJ L 157 du 9.6.2006, p. 24–86	Machinery directive	1.5.5. Extreme temperatures	X	X	X	X				A ou C	A priori, hot parts only after cannon fire See to insert warning in the user documentation
31	2006/42/CE	European directive	17-May-06	OJ L 157 du 9.6.2006, p. 24–86	Machinery directive	1.5.6. Fire					X	X	X	A	The electrical circuit must be properly protected with fuses or circuit breakers
32	2006/42/CE	European directive	17-May-06	OJ L 157 du 9.6.2006, p. 24–86	Machinery directive	1.5.7. Explosion								A ou C	Not applicable
33	2006/42/CE	European directive	17-May-06	OJ L 157 du 9.6.2006, p. 24–86	Machinery directive	1.5.8. Noise	X	X	X	X	X	X	X	A ou M	The exposure of users to noise is notably linked to the firing phases and not linked to the functioning of the Project SCO2-4-NPP See to insert in the user documentation, a reminder for the possible wearing of hearing protection
34	2006/42/CE	European directive	17-May-06	OJ L 157 du 9.6.2006, p. 24–86	Machinery directive	1.5.9. Vibrations	X	X	X	X	X	X	X	M	Not applicable

Line	N°	Type of text	Date	Publication date OJ	Title	Requirements	SUB01 : CHX Exchanger	SUB2 : DUHS exchanger	SUB3 : CO2 tanks	SUB4 : Turbomachine	SUB5 : Battery	SUB6 : Electrical Equipment	SUB7 : Electronic Components	Type of justification expected	Comments
35	2006/42/CE	European directive	17-May-06	OJ L 157 du 9.6.2006, p. 24–86	Machinery directive	1.5.10. Radiation Any functional ionizing radiation emitted by the machine must be limited to the lowest level necessary for the proper functioning of the machine during its installation, operation and cleaning.								A ou M	Not applicable No ionizing or non-ionizing radiation emitted by the Project SCO2-4-NPP
36	2006/42/CE	European directive	17-May-06	OJ L 157 du 9.6.2006, p. 24–86	Machinery directive	1.5.11. External radiation					X	X	X	A ou M	The Project SCO2-4-NPP must meet the requirements of the EMC directive See tab "Electrical and ATEX" of this matrix
37	2006/42/CE	European directive	17-May-06	OJ L 157 du 9.6.2006, p. 24–86	Machinery directive	1.5.12. Laser radiation								A et E	Not applicable
38	2006/42/CE	European directive	17-May-06	OJ L 157 du 9.6.2006, p. 24–86	Machinery directive	1.5.1.3 Emissions of hazardous materials and substances			X					I	Only during maintenance but does not depend directly on Project SCO2-4-NPP
39	2006/42/CE	European directive	17-May-06	OJ L 157 du 9.6.2006, p. 24–86	Machinery directive	1.5.1.5 Risk of slipping, tripping or falling	X	X	X	X	X	X	X	I	Justify the means of access with the technical prescriptions of norms NF EN ISO 14122 (1 to 4) Safety of machinery - Permanent means of access to machinery
40	2006/42/CE	European directive	17-May-06	OJ L 157 du 9.6.2006, p. 24–86	Machinery directive	1.5.1.6 Lightning								I	Not applicable
41	2006/42/CE	European directive	17-May-06	OJ L 157 du 9.6.2006, p. 24–86	Machinery directive	1.6 Maintenance 1.6.1 Machine maintenance 1.6.2 Access to workstations or intervention points 1.6.3 Separation of the machine from its energy sources 1.6.4 Operator intervention 1.6.5 Cleaning the interior parts	X	X	X	X	X	X	X	A	BHNP must provide installation, maintenance and service documentation in french for the Trail Gun Justify the means of access with the technical prescriptions of norms NF EN ISO 14122 (1 to 4) Safety of machinery - Permanent means of access to machinery The 230VAC or 400VAC power supply must be fitted with a disconnect switch or a removable plug to ensure the electrical separation function Requirements point 1.6.5 not applicable for Project SCO2-4-NPP

Line	N°	Type of text	Date	Publication date OJ	Title	Requirements	SUB01 : CHX Exchanger	SUB2 : DUHS exchanger	SUB3 : CO2 tanks	SUB4 : Turbomachine	SUB5 : Battery	SUB6 : Electrical Equipment	SUB7 : Electronic Components	Type of justification expected	Comments
44	2006/42/CE	European directive	17-May-06	OJ L 157 du 9.6.2006, p. 24–86	Machinery directive	1.7 Information 1.7.1 Information and warning on the machine 1.7.1.1 Information and information system 1.7.1.2 Warning device 1.7.3 Marking of machines 1.7.4 Instruction manual 1.7.4.1 General principles for drafting the instruction manual 1.7.4.2 Content of the instruction manual 1.7.4.3 Commercial documents	X	X	X	X	X	X	X	A et I	BHNP must provide user documentation in French The Project SCO2-4-NPP must have a declaration of conformity and the CE marking under the machine directive 2006/42 / EC Project SCO2-4-NPP
45	2006/42/CE	European directive	17-May-06	OJ L 157 du 9.6.2006, p. 24–86	Machinery directive	2.1. Machines for the food industry and machines for the cosmetic industry								A	Not applicable
46	2006/42/CE	European directive	17-May-06	OJ L 157 du 9.6.2006, p. 24–86	Machinery directive	2.2. Hand-held and / or hand-held portable machines								A	Not applicable
47	2006/42/CE	European directive	17-May-06	OJ L 157 du 9.6.2006, p. 24–86	Machinery directive	2.3. Woodworking machinery and materials with similar physical characteristics								A	Not applicable
48	2006/42/CE	European directive	17-May-06	OJ L 157 du 9.6.2006, p. 24–86	Machinery directive	3. ADDITIONAL ESSENTIAL HEALTH AND SAFETY REQUIREMENTS FOR PALLING DANGERS DUE TO MACHINE MOBILITY								A et I	Not applicable
49	2006/42/CE	European directive	17-May-06	OJ L 157 du 9.6.2006, p. 24–86	Machinery directive	3.1 General 3.1.1 Definitions a) "Machine presenting dangers due to its mobility": - machine whose operation requires either mobility during work, or a continuous or semi-continuous movement following a succession of fixed work stations, or - machine which works without displacement, but which can be provided with means allowing it to be moved more easily from one place to another	X	X		X				A et I	Not applicable

Line	N°	Type of text	Date	Publication date OJ	Title	Requirements	SUB01 : CHX Exchanger	SUB2 : DUHS exchanger	SUB3 : CO2 tanks	SUB4 : Turbomachine	SUB5 : Battery	SUB6 : Electrical Equipment	SUB7 : Electronic Components	Type of justification expected	Comments
50	2006/42/CE	European directive	17-May-06	OJ L 157 du 9.6.2006, p. 24–86	Machinery directive	3.2.1 Operator station 3.2.2. Seat 3.2.3 Station for other people								I	Not applicable
51	2006/42/CE	European directive	17-May-06	OJ L 157 du 9.6.2006, p. 24–86	Machinery directive	3.3 Control systems 3.3.1 Service organ 3.3.3 Displacement function	X	X		X				I	Not applicable
52	2006/42/CE	European directive	17-May-06	OJ L 157 du 9.6.2006, p. 24–86	Machinery directive	3.4 Protection against mechanical risks 3.4.1 Uncontrolled movements 3.4.2 Movable transmission components (engine compartment safety) 3.4.3 Turning and tipping Precision on the protection for the machines> 15kW 3.4.7 Power transmission between the self-propelled machine (or the tractor) and the receiving machine	X	X		X					Not applicable
53	2006/42/CE	European directive	17-May-06	OJ L 157 du 9.6.2006, p. 24–86	Machinery directive	3.5. Protective measures against other risks 3.5.1. Accumulators 3.5.2. Fire 3.5.3. Emissions of hazardous substances	X	X		X	X			A et I	
54	2006/42/CE	European directive	17-May-06	OJ L 157 du 9.6.2006, p. 24–86	Machinery directive	3.6.1 Signaling, signals and warnings	X	X		X					Not applicable
55	2006/42/CE	European directive	17-May-06	OJ L 157 du 9.6.2006, p. 24–86	Machinery directive	3.6.2. Marking	X	X		X				I	Not applicable

Line	N°	Type of text	Date	Publication date OJ	Title	Requirements	SUB01 : CHX Exchanger	SUB2 : DUHS exchanger	SUB3 : CO2 tanks	SUB4 : Turbomachine	SUB5 : Battery	SUB6 : Electrical Equipment	SUB7 : Electronic Components	Type of justification expected	Comments
56	2006/42/CE	European directive	17-May-06	OJ L 157 du 9.6.2006, p. 24–86	Machinery directive	3.6.3 Instructions manual 3.6.3.1 Vibrations 3.6.3.2 Multiple uses	X	X		X					Not applicable
57	2006/42/CE	European directive	17-May-06	OJ L 157 du 9.6.2006, p. 24–86	Machinery directive	4. ESSENTIAL ADDITIONAL HEALTH AND SAFETY REQUIREMENTS FOR PALLING HAZARDS DUE TO LIFTING OPERATIONS								A et I	Not applicable
58	2006/42/CE	European directive	17-May-06	OJ L 157 du 9.6.2006, p. 24–86	Machinery directive	4.1.2. Protective measures against mechanical risks								A et/ou E	Not applicable
59	2006/42/CE	European directive	17-May-06	OJ L 157 du 9.6.2006, p. 24–86	Machinery directive	4.1.3. Suitability for use When placing a lifting machine or accessories on the market or putting it into service for the first time, the manufacturer or his authorized representative shall ensure, by appropriate measures that he takes or has taken made, that the machine and ready-to-use lifting accessories, whether powered by human force or by a motor, can perform their intended functions safely The static and dynamic tests referred to in section 4.1.2.3 must be carried out on any lifting machine ready to be put into service When the machine cannot be mounted on the premises of the manufacturer or his authorized representative, appropriate measures must be taken at the place of use Otherwise, measures can be taken either at the manufacturer's premises or at the place of use.									Not applicable

Line	N°	Type of text	Date	Publication date OJ	Title	Requirements	SUB01 : CHX Exchanger	SUB2 : DUHS exchanger	SUB3 : CO2 tanks	SUB4 : Turbomachine	SUB5 : Battery	SUB6 : Electrical Equipment	SUB7 : Electronic Components	Type of justification expected	Comments
60	2006/42/CE	European directive	17-May-06	OJ L 157 du 9.6.2006, p. 24–86	Machinery directive	4.2 Requirements for machinery powered by energy other than human force 4.2.1 Movement control 4.2.2 Control of stresses 4.2.3 Installations guided by cables								A et I	Not applicable
61	2006/42/CE	European directive	17-May-06	OJ L 157 du 9.6.2006, p. 24–86	Machinery directive	4.3 Information and marking 4.3.1 Chains, cables and straps 4.3.3 Lifting machine								A et I	Not applicable
62	2006/42/CE	European directive	17-May-06	OJ L 157 du 9.6.2006, p. 24–86	Machinery directive	4.4 Instructions Notice								A et I	Not applicable

Line	N°	Type of text	Date	Publication date OJ	Title	Requirements	SUB01 : CHX Exchanger	SUB2 : DUHS exchanger	SUB3 : CO2 tanks	SUB4 : Turbomachine	SUB5 : Battery	SUB6 : Electrical Equipment	SUB7 : Electronic Components	Type of justification expected	Comments
1	2014/30/EU	European directive	26-Feb-14	OJ L 96 du 29.3.2014, p. 79–106	Electromagnetic Compatibility (EMC) Directive	ANNEX I Essential requirements 1. General requirements The equipment must be designed and manufactured in accordance with the state of the art, so as to guarantee: a) that the electromagnetic disturbances produced do not exceed the level above which radio and telecommunications equipment or other equipment cannot operate as intended; b) that they have a level of immunity to electromagnetic interference which is to be expected in the context of the intended use which allows them to operate without unacceptable degradation of said use.	X	X	X	X	X	X	X	A et C	BHNP must justify the requirements regarding EMC
2	2014/30/EU	European directive	26-Feb-14	OJ L 96 du 29.3.2014, p. 79–106	Electromagnetic Compatibility (EMC) Directive	ANNEX I Essential requirements 2. Specific requirements for fixed installations Installation and intended use of components Fixed installations must be installed in accordance with good engineering practice and in compliance with the information on the intended use of their components, in order to meet the essential requirements set out in point 1.	X	X	X	X	X	X	X	A et I	Project SCO2-4-NPP is a machinery and a fixed installation
3	2014/30/EU	European directive	26-Feb-14	OJ L 96 du 29.3.2014, p. 79–106	Electromagnetic Compatibility (EMC) Directive	ANNEX IV EU declaration of conformity (n ° XXXX) (1) (1) The assignment of a number to the declaration of conformity is optional for the manufacturer.	X	X	X	X	X	X	X	A et C	The Project SCO2-4-NPP must have a declaration of conformity and the CE marking for Electromagnetic Compatibility (EMC) Directive

Line	N°	Type of text	Date	Publication date OJ	Title	Requirements	SUB01 : CHX Exchanger	SUB2 : DUHS exchanger	SUB3 : CO2 tanks	SUB4 : Turbomachine	SUB5 : Battery	SUB6 : Electrical Equipment	SUB7 : Electronic Components	Type of justification expected	Comments
4	2014/35/UE	European directive	29-Mar-14	OJ L 96 du 29.3.2014, p. 357–374	Low voltage directive 2014/35/UE	Annex I 1. General conditions a) The essential characteristics, knowledge and observance of which condition use in accordance with its intended purpose and safe use, appear on the electrical equipment or, if this is not possible, on an accompanying document. b) Electrical equipment and its component parts are constructed in such a way that they can be connected safely and adequately. c) The electrical equipment is designed and manufactured in such a way that protection against the dangers listed in points 2 and 3 is guaranteed, subject to use for its intended purpose and adequate maintenance. See: _ EN 62368-1 “Audio/video, information and communication technology equipment”; _ EN61010 "Safety rules for electrical measuring, regulating and laboratory equipment - Part 1: general requirements";	X	X	X	X	X	X	X		

Line	N°	Type of text	Date	Publication date OJ	Title	Requirements	SUB01 : CHX Exchanger	SUB2 : DUHS exchanger	SUB3 : CO2 tanks	SUB4 : Turbomachine	SUB5 : Battery	SUB6 : Electrical Equipment	SUB7 : Electronic Components	Type of justification expected	Comments
5	2014/35/UE	European directive	29-Mar-14	OJ L 96 du 29.3.2014, p. 357–374	Low voltage directive 2014/35/UE	Annex I 2. Protection against dangers which may arise from electrical equipment Technical measures are established in accordance with point 1, so that: (a) persons and domestic animals are adequately protected against the dangers of injury or other damage which may be caused by direct or indirect contact; b) temperatures, arcs or radiation that would cause a hazard do not occur; (c) persons, domestic animals and property are adequately protected against hazards of a non-electrical nature arising from electrical equipment and revealed by experience; d) the insulation is suitable for the expected stresses. See: _ EN60950-1 "Information processing equipment - Safety - Part 1: general requirements"; _ EN61010 "Safety rules for electrical measuring, regulating and laboratory equipment - Part 1: general requirements";	X	X	X	X	X	X	X		

Line	N°	Type of text	Date	Publication date OJ	Title	Requirements	SUB01 : CHX Exchanger	SUB2 : DUHS exchanger	SUB3 : CO2 tanks	SUB4 : Turbomachine	SUB5 : Battery	SUB6 : Electrical Equipment	SUB7 : Electronic Components	Type of justification expected	Comments
6	2014/35/UE	European directive	29-Mar-14	OJ L 96 du 29.3.2014, p. 357–374	Low voltage directive 2014/35/UE	Annex I 3. Protection against dangers which may be caused by external influences on electrical equipment Technical measures are provided in accordance with point 1, so that the electrical equipment: (a) meets the intended mechanical requirements, so that people, pets and property are not endangered; b) resists non-mechanical influences under the intended environmental conditions, so that people, pets and property are not endangered; c) does not endanger people, pets and objects under the intended overload conditions. See: _ EN60950-1 "Information processing equipment - Safety - Part 1: general requirements"; _ EN61010 "Safety rules for electrical measuring, regulating and laboratory equipment - Part 1: general requirements";	X	X	X	X	X	X	X		

Line	N°	Type of text	Date	Publication date OJ	Title	Requirements	SUB01 : CHX Exchanger	SUB2 : DUHS exchanger	SUB3 : CO2 tanks	SUB4 : Turbomachine	SUB5 : Battery	SUB6 : Electrical Equipment	SUB7 : Electronic Components	Type of justification expected	Comments
	2014/35/UE	European directive	29-Mar-14	OJ L 96 du 29.3.2014, p. 357–374	Low voltage directive 2014/35/UE	Annex III 4. CE marking and EU declaration of conformity 4.1. The manufacturer shall affix the CE marking to each electrical equipment which meets the applicable requirements set out in this directive. 4.2. The manufacturer shall draw up an EU declaration of conformity for a product model in writing and keep it, together with the technical documentation, at the disposal of the national market surveillance authorities for ten years after the electrical equipment has been put on the market. The EU declaration of conformity specifies the electrical equipment for which it has been drawn up. A copy of the EU declaration of conformity is made available to the competent market surveillance authorities upon request.	X	X	X	X	X	X	X		

Line	N°	Type of text	Date	Publication date OJ	Title	Requirements	SUB01 : CHX Exchanger	SUB2 : DUHS exchanger	SUB3 : CO2 tanks	SUB4 : Turbomachine	SUB5 : Battery	SUB6 : Electrical Equipment	SUB7 : Electronic Components	Type of justification expected	Comments
1	2014/68/UE	European directive	15-May-14	OJ L 189/164 du 27/06/2014	Pressure Equipment Directive (PED)	Article 4 - Technical requirements	X	X		X					
2	2014/68/UE	European directive	15-May-14	OJ L 189/164 du 27/06/2014	Pressure Equipment Directive (PED)	Article 6 Obligations of manufacturers"	X	X		X					
3	2014/68/UE	European directive	15-May-14	OJ L 189/164 du 27/06/2014	Pressure Equipment Directive (PED)	Article 14 Conformity assessment procedures"	X	X		X					
4	2014/68/UE	European directive	15-May-14	OJ L 189/164 du 27/06/2014	Pressure Equipment Directive (PED)	Article 17 EU declaration of conformity Article 18 General principles of CE marking Article 19 Rules and conditions for affixing the CE marking"	X	X		X					
5	2014/68/UE	European directive	15-May-14	OJ L 189/164 du 27/06/2014	Pressure Equipment Directive (PED)	ANNEX I ESSENTIAL SAFETY REQUIREMENTS"	X	X		X					

Line	N°	Type of text	Date	Publication date OJ	Title	Requirements	SUB01 : CHX Exchanger	SUB2 : DUHS exchanger	SUB3 : CO2 tanks	SUB4 : Turbomachine	SUB5 : Battery	SUB6 : Electrical Equipment	SUB7 : Electronic Components	Type of justification expected	Comments
1	1907/2006	Regulation EC	17-Dec-06	OJ L 396 du 30.12.2006, p. 1–848	Regulation concerning the Registration, Evaluation, Authorisation and Restriction of Chemicals (REACH)	Article 33 : obligation of article suppliers to communicate information on SVHC substances contained in their articles to recipients and consumers	X	X	X	X	X	X	X	A ou M	For commercial equipment, manufacturer's certificate. In addition, requests an information declaration article 33 - REACH
2	1907/2006	Regulation EC	18-Dec-06	OJ L 396 du 30.12.2006, p. 1–848	Regulation concerning the Registration, Evaluation, Authorisation and Restriction of Chemicals (REACH)	Article 6 : General obligation to register substances as such or contained in mixtures	X	X	X	X	X	X	X	A ou M	
3	1907/2006	Regulation EC	19-Dec-06	OJ L 396 du 30.12.2006, p. 1–848	Regulation concerning the Registration, Evaluation, Authorisation and Restriction of Chemicals (REACH)	Article 31 : Requirements relating to safety data sheets	X	X	X	X	X	X	X	A ou M	To see, if necessary for the supply of hydraulic SDS for users
4	1907/2006	Regulation EC	17-Dec-06	OJ L 396 du 30.12.2006, p. 1–848	Regulation concerning the Registration, Evaluation, Authorisation and Restriction of Chemicals (REACH)	Article 56 : General provisions A manufacturer, importer or downstream user shall not place a substance on the market for use or use it himself if that substance is included in Annex XIV ANNEX XIV : List of substances subject to authorization	X	X	X	X	X	X	X	A ou M	
5	1907/2006	Regulation EC	18-Dec-06	OJ L 396 du 30.12.2006, p. 1–848	Regulation concerning the Registration, Evaluation, Authorisation and Restriction of Chemicals (REACH)	Article 67 : A substance, as such or contained in a mixture or an article, which is subject to a restriction under Annex XVII, is not manufactured, placed on the market or used until it complies the conditions provided for by the said restriction (excluding scientific research and development activities. ANNEX XVII : Restrictions on the manufacture, placing on the market and use of certain dangerous substances and preparations and certain dangerous articles	X	X	X	X	X	X	X	A ou M	
6	98/24/EC	European directive	07/04/1998	OJ n° L 131 du 05.05.1998, p. 0011 - 0023	Directive on the protection of the health and safety of workers from the risks related to chemical agents at work	Annex I and II Binding occupational exposure limit and exposure value triggering medical surveillance for metallic lead and its compounds	X	X	X	X	X	X	X	A ou M	Commitmentt or declaration to ensure the absence of these chemical agents REACH analysis also verifies this requirement

Line	N°	Type of text	Date	Publication date OJ	Title	Requirements	SUB01 : CHX Exchanger	SUB2 : DUHS exchanger	SUB3 : CO2 tanks	SUB4 : Turbomachine	SUB5 : Battery	SUB6 : Electrical Equipment	SUB7 : Electronic Components	Type of justification expected	Comments
7	98/24/EC	European directive	07/04/1998	OJ n° L 131 du 05.05.1998, p. 0011 - 0023	Directive on the protection of the health and safety of workers from the risks related to chemical agents at work	Annex III Prohibitions _ 2-naphthylamine and its salts, exemption limit: 0.1% by weight; _ 4-aminodiphenyl and its salts, exemption limit: 0.1% by weight; _ Benzidine and its salts, exemption limit: 0.1% by weight; _ 4-nitrodiphenyl, exemption limit: 0.1% by weight.	X	X	X	X	X	X	X	A ou M	Commitmentt or declaration to ensure the absence of these chemical agents REACH analysis also verifies this requirement
8	2011/65/EU	European directive	08-Jun-11	OJ L 174 du 1.7.2011, p. 88)	Directive on the restriction of the use of certain hazardous substances in electrical and electronic equipment (ROHS)	Annex II Restricted substances referred to in Article 4 (1) and maximum concentration values tolerated by weight in homogeneous materials. ead (0,1 %) Mercury (0,1 %) Cadmium (0,01 %) Hexavalent chromium (0,1 %) Polybrominated biphenyls (PBB) (0,1 %) Polybrominated diphenyl ethers (PBDE) (0,1 %) Bis(2-ethylhexyl) phthalate (DEHP) (0,1 %) Butyl benzyl phthalate (BBP) (0,1 %) Dibutyl phthalate (DBP) (0,1 %) Diisobutyl phthalate (DIBP) (0,1 %)					X	X	X	A	
9	2004/37/EC	European directive	30/04/2004	OJ n° L 158 du 30.4.2004, p. 50–76	Directive on the protection of workers from the risks related to exposure to carcinogens or mutagens at work	1. Risk identification and assessment	X	X	X	X	X	X	X	A ou M	For commercial equipment, manufacturer's certificate Warning for paintings Note: asbestos is taken into account in this directive REACH analysis also verifies this requirement
10	2004/37/EC	European directive	30/04/2004	OJ n° L 158 du 30.4.2004, p. 50–76	Directive on the protection of workers from the risks related to exposure to carcinogens or mutagens at work	2. Measures to avoid or reduce exposure	X	X	X	X	X	X	X	A	If there is a risk of exposure to carcinogens or mutagens, manufacturers must inform the user
11	2004/37/EC	European directive	30/04/2004	OJ n° L 158 du 30.4.2004, p. 50–76	Directive on the protection of workers from the risks related to exposure to carcinogens or mutagens at work	3. Occupational exposure limit values for Benzene, and Monomeric vinyl chloride and hardwood dust	X	X	X	X	X	X	X	A	If there is a risk of exposure to carcinogens or mutagens, manufacturers must inform the user REACH analysis also verifies this requirement

Line	N°	Type of text	Date	Publication date OJ	Title	Requirements	SUB01 : CHX Exchanger	SUB2 : DUHS exchanger	SUB3 : CO2 tanks	SUB4 : Turbomachine	SUB5 : Battery	SUB6 : Electrical Equipment	SUB7 : Electronic Components	Type of justification expected	Comments
12	2019/1021	Regulation EC	20-Jun-19	OJ L 169 du 25.6.2019, p. 45	Regulation 2019/1021 on persistent organic pollutants (POP)	"ANNEX I Part A: Substances listed in the convention and protocol and substances listed only in the convention Part B: Substances Only Listed in the Protocol	X	X	X	X	X	X	X		
13	2019/1021	Regulation EC	21-Jun-19	OJ L 169 du 25.6.2019, p. 45	Regulation 2019/1021 on persistent organic pollutants (POP)	"ANNEX II List of restricted substances Part A: Substances listed in the convention and protocol Part B: Substances Only Listed in the Protocol	X	X	X	X	X	X	X		
14	2019/1021	Regulation EC	22-Jun-19	OJ L 169 du 25.6.2019, p. 45	Regulation 2019/1021 on persistent organic pollutants (POP)	ANNEX III List of substances subject to emission limitation provisions"	X	X	X	X	X	X	X		
15	2019/1021	Regulation EC	23-Jun-19	OJ L 169 du 25.6.2019, p. 45	Regulation 2019/1021 on persistent organic pollutants (POP)	ANNEX IV List of substances subject to the waste management provisions provided for in Article 7	X	X	X	X	X	X	X		
16	2019/1021	Regulation EC	24-Jun-19	OJ L 169 du 25.6.2019, p. 45	Regulation 2019/1021 on persistent organic pollutants (POP)	ANNEX I Waste management	X	X	X	X	X	X	X		

Line	N°	Type of text	Date	Publication date OJ	Title	Requirements	SUB01 : CHX Exchanger	SUB2 : DUHS exchanger	SUB3 : CO2 tanks	SUB4 : Turbomachine	SUB5 : Battery	SUB6 : Electrical Equipment	SUB7 : Electronic Components	Type of justification expected	Comments
Not applicable, the Project SCO2-4-NPP does not include equipment producing emissions															

Line	N°	Type of text	Date	Publication date OJ	Title	Requirements	SUB01 : CHX Exchanger	SUB2 : DUHS exchanger	SUB3 : CO2 tanks	SUB4 : Turbomachine	SUB5 : Battery	SUB6 : Electrical Equipment	SUB7 : Electronic Components	Type of justification expected	Comments
1	2006/66/CE	European directive	06-Sep-06	OJ L 266 du 26.9.2006, p. 1–14	Directive 2006/66/CE on batteries and accumulators and waste batteries and accumulators	1. Prohibition of the marketing of batteries and accumulators integrated or not in devices containing more than 0.0005% by weight of mercury, including those integrated in devices whose mercury content is < 2% in weight					X				
2	2006/66/CE	European directive	06-Sep-06	OJ L 266 du 26.9.2006, p. 1–14	Directive 2006/66/CE on batteries and accumulators and waste batteries and accumulators	2. Marking of batteries, accumulators and battery assembly by means of the symbol set out in Annex II					X				
3	2006/66/CE	European directive	06-Sep-06	OJ L 266 du 26.9.2006, p. 1–14	Directive 2006/66/CE on batteries and accumulators and waste batteries and accumulators	3. Disposal, Member States shall prohibit the disposal by landfill or incineration of waste industrial and automotive batteries and accumulators					X				
4	2012/19/EU	European directive	04/07/2012	OJ L 197 du 24.7.2012, p. 38–71	Directive on waste electrical and electronic equipment (WEEE)	ANNEX 1 Categories of EEE covered by this Directive : 1. Large household appliances 2. Small household appliances 3. IT and telecommunications equipment 4. Consumer equipment and photovoltaic panels 5. Lighting equipment 6. Electrical and electronic tools (with the exception of large-scale stationary industrial tools) 7. Toys, leisure and sports equipment 8. Medical devices (with the exception of all implanted and infected products) 9. Monitoring and control instruments 10. Automatic dispensers	X	X	X	X	X	X	X	A	
5	2012/19/UE	European directive	04/07/2012	OJ L 197 du 24.7.2012, p. 38–71	Directive on waste electrical and electronic equipment (WEEE)	Annex IX Symbol for marking WEEE	X	X	X	X	X	X	X	A	Symbol for the marking of EEE Otherwise at least the DTU must specify that electrical and electronic waste must follow an appropriate "waste" path

Line	N°	Type of text	Date	Publication date OJ	Title	Requirements	SUB01 : CHX Exchanger	SUB2 : DUHS exchanger	SUB3 : CO2 tanks	SUB4 : Turbomachine	SUB5 : Battery	SUB6 : Electrical Equipment	SUB7 : Electronic Components	Type of justification expected	Comments
6	2008/98/EC	European directive	19-Nov-08	OJ L 312 du 22.11.2008, p. 3	Directive on waste	CHAPTER I SUBJECT, SCOPE AND DEFINITIONS	X	X	X	X	X	X	X	A	To see according to the life cycle of the Project SCO2-4-NPP BHNP must carry out an analysis for this point (case of demilitarization)
7	2008/98/EC	European directive	19-Nov-08	OJ L 312 du 22.11.2008, p. 3	Directive on waste	CHAPTER II GENERAL REQUIREMENTS	X	X	X	X	X	X	X	A	To see according to the life cycle of the Project SCO2-4-NPP BHNP must carry out an analysis for this point (case of demilitarization)
8	2008/98/EC	European directive	19-Nov-08	OJ L 312 du 22.11.2008, p. 3	Directive on waste	CHAPTER III WASTE MANAGEMENT	X	X	X	X	X	X	X	A	To see according to the life cycle of the Project SCO2-4-NPP BHNP must carry out an analysis for this point (case of demilitarization)
9	2008/98/EC	European directive	19-Nov-08	OJ L 312 du 22.11.2008, p. 3	Directive on waste	CHAPTER IV AUTHORIZATIONS AND REGISTRATION CHAPTER V PLANS AND PROGRAMS CHAPTER VI INSPECTIONS AND RECORDS CHAPTER VII FINAL PROVISIONS	X	X	X	X	X	X	X	A	To see according to the life cycle of the Project SCO2-4-NPP BHNP must carry out an analysis for this point (case of demilitarization)
10	2008/98/EC	European directive	19-Nov-08	OJ L 312 du 22.11.2008, p. 3	Directive on waste	ANNEX I DISPOSAL OPERATIONS	X	X	X	X	X	X	X	A	To see according to the life cycle of the Project SCO2-4-NPP BHNP must carry out an analysis for this point (case of demilitarization)
11	2008/98/EC	European directive	19-Nov-08	OJ L 312 du 22.11.2008, p. 3	Directive on waste	ANNEX II RECOVERY OPERATIONS	X	X	X	X	X	X	X	A	To see according to the life cycle of the Project SCO2-4-NPP BHNP must carry out an analysis for this point (case of demilitarization)
12	2008/98/EC	European directive	19-Nov-08	OJ L 312 du 22.11.2008, p. 3	Directive on waste	ANNEX III PROPERTIES THAT MAKE WASTE DANGEROUS	X	X	X	X	X	X	X	A	To see according to the life cycle of the Project SCO2-4-NPP BHNP must carry out an analysis for this point (case of demilitarization)

Line	N°	Type of text	Date	Publication date OJ	Title	Requirements	SUB01 : CHX Exchanger	SUB2 : DUHS exchanger	SUB3 : CO2 tanks	SUB4 : Turbomachine	SUB5 : Battery	SUB6 : Electrical Equipment	SUB7 : Electronic Components	Type of justification expected	Comments
13	2008/98/EC	European directive	19-Nov-08	OJ L 312 du 22.11.2008, p. 3	Directive on waste	ANNEX IV EXAMPLES OF WASTE PREVENTION MEASURES REFERRED TO IN ARTICLE 29 ANNEX IVa EXAMPLES OF ECONOMIC INSTRUMENTS AND OTHER MEASURES TO ENCOURAGE THE APPLICATION OF THE WASTE HIERARCHY REFERRED TO IN ARTICLE 4 (3) ANNEX IVb IMPLEMENTATION PLAN TO BE SUBMITTED IN ACCORDANCE WITH ARTICLE 11 (3)	X	X	X	X	X	X	X	A	To see according to the life cycle of the Project SCO2-4-NPP BHNP must carry out an analysis for this point (case of demilitarization)