sCO2-4-NPP: Innovative sCO2-Based Heat Removal Technology for an Increased Level of Safety of Nuclear Power Plants

Deliverable 8.5
sCO2-4-NPP Symposium

Work programme topic addressed: NFRP-2018-10: Encouraging innovation in nuclear safety for the benefit of European citizen

Type of action: Innovation action

Grant Agreement number:	847606
Start date of project: 1 September 2019	Duration: 36 months
Lead beneficiary of this deliverable:	EDF
Due date of deliverable: 31/07/2022	Actual submission date: 31/07/2022
	Version #: R1.0

Type		
R	Document, report excluding the periodic and final reports	X
DEM	Demonstrator, pilot, prototype, plan designs	
DEC	Websites, patents filing, press & media actions, videos, etc.	
OTHER	Software, technical diagram, etc.	
Dissemination level		
PU	PUBLIC, fully open, e.g. web	X
CO	CONFIDENTIAL, restricted under conditions set out in Model Grant Agreement	

This project has received funding from the Euratom research and training programme 2014-2018 under grant agreement No 847606.

Revision History

Release	Date	Reason for Change	Author	Distribution
R0.1	12/07/2022	Draft for internal review	Albannie Cagnac	Consortium
R1.0	31/072022	Final version	Albannie Cagnac	Public

Deliverable Contributors

Authors

Partner	Name
EDF	Albannie Cagnac

Contributors

Partner	Name
ARTTIC	Susan Barreault
USTUTT	Michael Buck
GfS	Frieder Hecker
UDE	Haikun Ren
FIVES	Sarah Tioual Demange
JSI	Andrej Prošek
KSG	Peter Lasch

Internal Reviewers

Partner	Name
USTUTT	Jörg Starflinger

Table of contents

List of Tables

List of Figures

List of Acronyms

Abbreviation / Acronym	Description / meaning
ATHLET	Analysis of THermal-hydraulics of LEaks and Transients. Simulation code use for the analysis of the whole spectrum of leaks and transients in PWRs and BWRs. The code is applicable for western reactor designs as well as for Russian VVER and RBMK reactors.
CATHARE	Code for Analysis of Thermal-hydraulics during an Accident of Reactor and safety Evaluation is a two-phase thermal-hydraulic simulator used, in particular, in PWR safety analyses, the verification post-accidental operating procedures, and in research and development.
CFD	Computational Fluid Dynamics
CHX	Compact Heat Exchanger
DUHS	Diverse Ultimate Heat Sink
KONVOI	KONVOI is a standardized KWU construction line of PWR with about 1300 MW electrical power
Modelica	Real time running code to simulate parametric studies of the sCO2-HeRo and sCO2-4-NPP loop
NPP	Nuclear Power Plant
PWR	Pressurised Water Reactor
SBO	Station Black Out, an accident scenario where the plant is left without alternating current electrical power
sCO2	Supercritical Carbon Dioxide
TRL	Technology Readiness Level

1 Executive Summary

This deliverable D8.5 documents the sCO2-4-NPP Final Symposium held in hybrid mode (in person and remote) over two days on 8th and 9th June 2022 in Essen, Germany, at the partner KSG installations. The purpose of the workshop was to share final project results with the public, particularly with potential end-users of the supercritical CO2 (sCO2) heat removal system.

The discussion with the audience is summarised and the presentations are provided in the appendix.

2 Introduction

This document summarizes the sCO2-4-NPP Final Symposium held 8th and 9th June 2022. Firstly, the purpose of the symposium is detailed, including the audience for this dissemination event. In the following sections, the organisation of the symposium is described, the communication campaign, the symposium format and the agenda. A summary of the discussion is then provided. Finally, the presentations from the symposium are provided in the appendix.

3 Purpose of Symposium

A demonstration event targeting nuclear power plant (NPP) operators was foreseen in the Grant Agreement at project end to demonstrate the interaction of the sCO2-4-NPP system with the virtual NPP. The event was intended to target mainly nuclear actors (operators, research institutes, and safety authorities) to disseminate sCO2-4-NPP results. Members of the sCO2-4-NPP End-user Group were invited to actively participate and comment on the use of sCO2-4-NPP results from an end-user perspective.

3.1 Target Audience

NPP operators (end users) are one of the most important target audiences of the project's dissemination activities as adoption of the system by NPP operators is crucial to achieving a strong impact on nuclear power in Europe. The End-user Group of external advisors was thus a key target audience for this event.

3.1.1 Advisory Boards – End Users

The sCO2-4-NPP project has two boards of external advisors, the End-user Group and the sC02-4-NPP Advisors.

To ensure industrial relevance and future adoption of the sCO2-4-NPP system in the nuclear and other power generation industries, the End-User Group assesses project developments and provides feedback from the end-user perspective, representing operators of different NPP types from different regions and industrial manufacturers of the sCO2 system components.

The SCO2-4-NPP Advisors provide advice to the project on compliance with nuclear safety regulations as well as specific scientific and technical issues (e.g. sCO2-cycles, ATHLET calculations).

The advisory boards include representatives of RWE, Framatome Germany, the Swiss Federal Nuclear Safety Inspectorate (ENSI), TÜV-SÜD, and Naval Group. All external advisors attended the symposium either in person or online.

3.1.2 General Public

A broader audience was also targeted, with the intention to welcome end-users from other sectors, component manufacturers, safety authorities, and the supercritical CO2 researchers working on applications in other sectors.

The interest in attending the symposium for this broad target audience largely falls into two categories:

- Nuclear energy experts: To learn what sCO2 technology can provide for the nuclear industry
- sCO2 experts: To learn about sCO2 developments for the nuclear power application (magnetic bearings, heat exchanger design, etc.)

Among the general public who expressed interest in attending the event were engineers and managers in the energy industry and in related academic fields.

Twenty-one persons registered for the first day of the symposium (remote possibility), in addition to the project partners. Twenty-four persons from the consortium partners also attended either in person or remotely.

Table 1: Symposium participants excluding project partners

Organisation	Registered
AURA	1
Brunel University London	1
CEA	5
Cranfield University	1
European Commission	1
ENSI	1
Flame Spray S.p.A.	1
Framatome GmbH	2
Naval Group	2
RWE Technology International	2
Shell	1
Total Energies	2
TÜV SÜD	1
TOTAL	**21**

3.2 Communication campaign

A communication campaign was necessary to enlarge the audience for the public event. The campaign was undertaken with an announcement (see Figure 1) in electronic version and diffused using the following channels:

- sCO2-4-NPP public website and social media accounts on Twitter and LinkedIn.
- Diffusion of workshop announcement by project partners to their professional networks such as LinkedIn and internal networks.
- Email invitation to registrants of the previous public event, the online End-user Workshop held in January 2022.
- ETN Global, which groups several organisations involved in gas turbine technology, has a Working Group on sCO2. The sCO2-4-NPP symposium announcement was shared within their professional network.

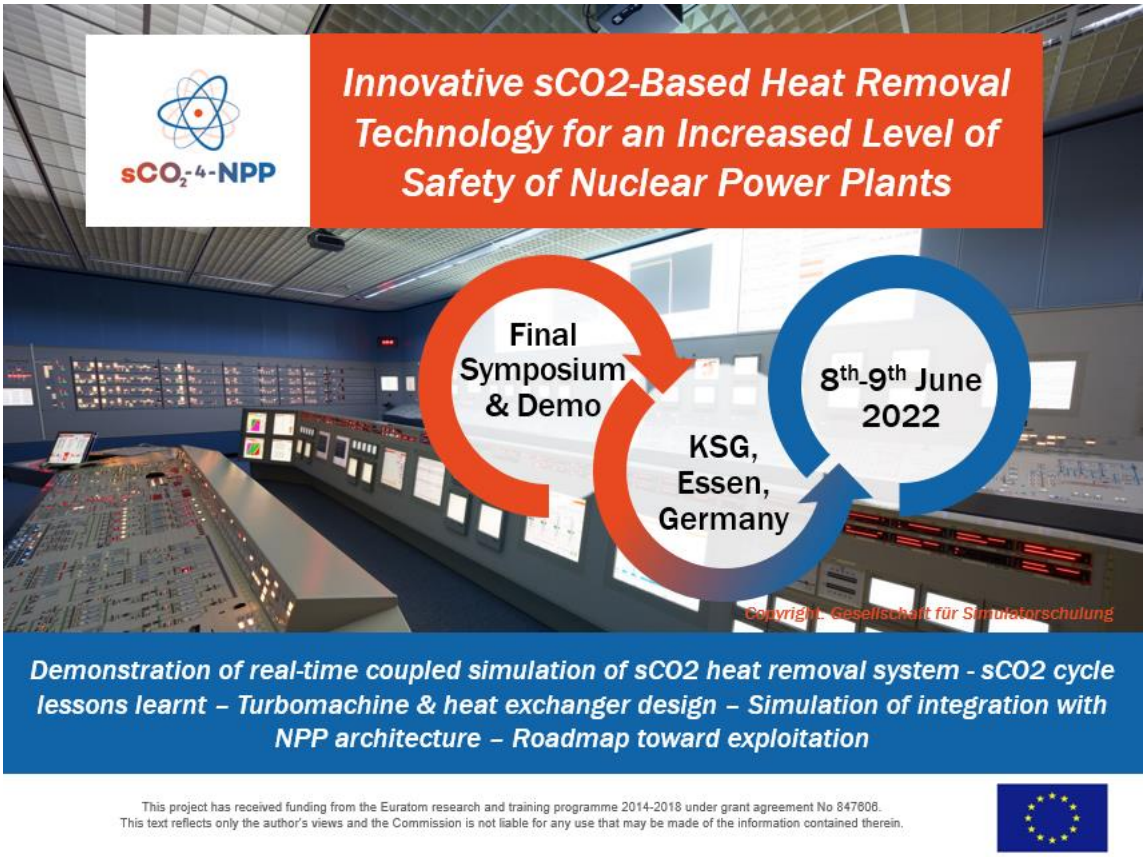

Figure 1: Workshop Announcement

The communication campaign was launched seven weeks before the event. The initial event announcements on the project social media accounts registered over 700 views for LinkedIn and about 250 for Twitter.

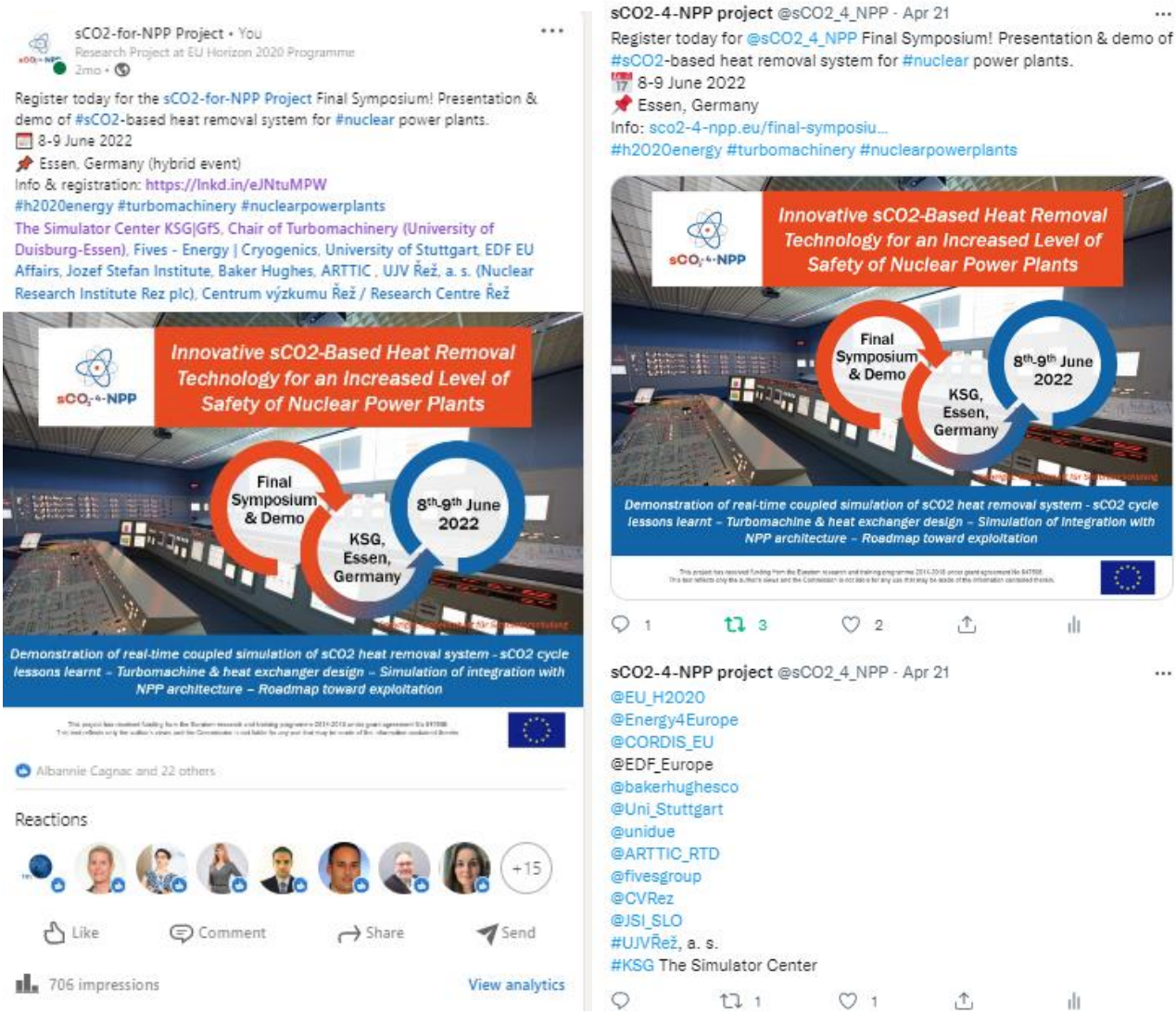

Figure 2: Communication campaign - Announcement on LinkedIn (left) and Twitter (right)

Public communications following the event were also made and received significant additional visibility for the project, particularly on LinkedIn with roughly 2,500 Impressions as well as Twitter with 300 impressions within six weeks, including among the targeted audience of nuclear power plant operators, researchers and safety authorities.

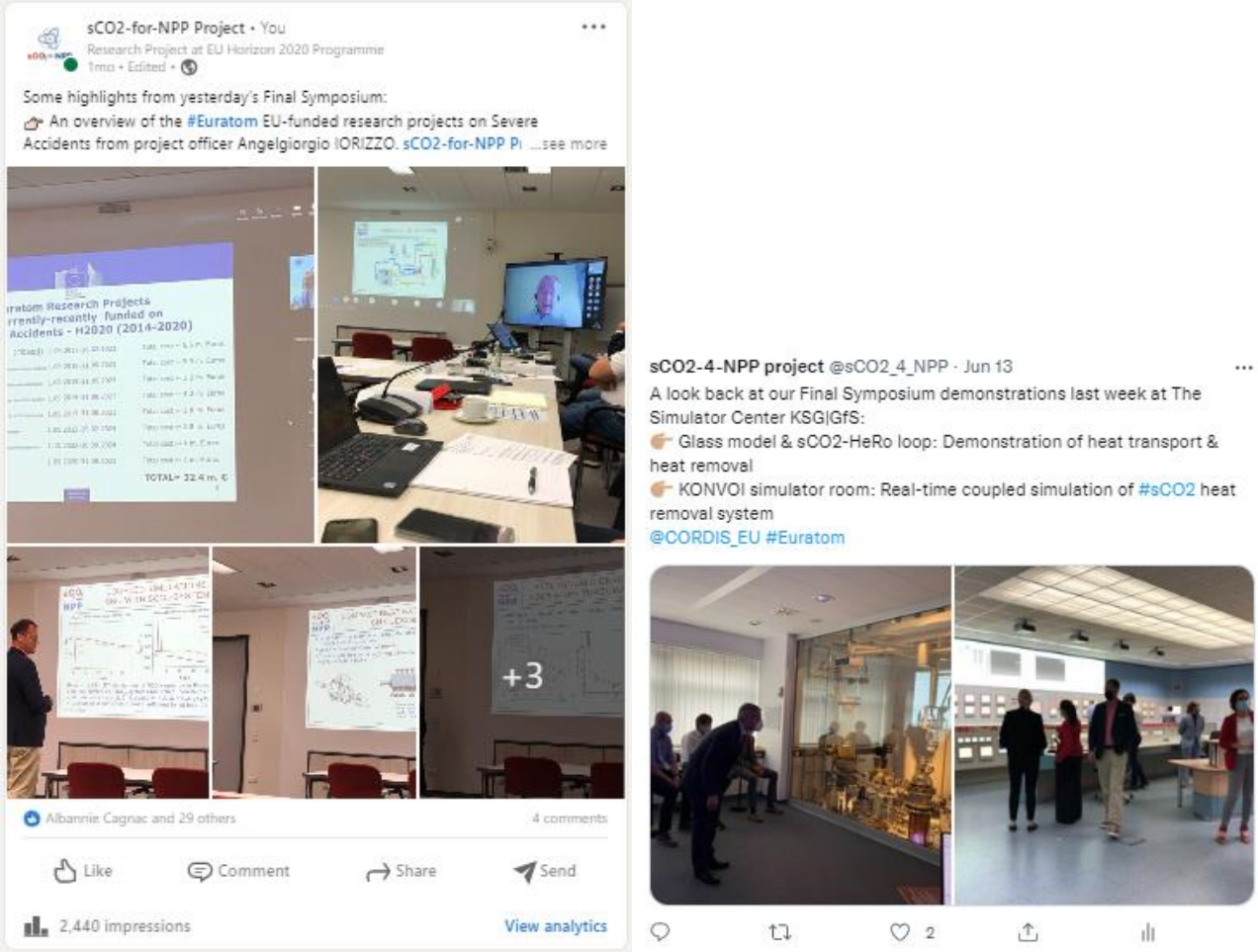

Figure 3: Communication campaign - Event highlights on LinkedIn (left) and Twitter (right)

4 Organisation of Symposium

4.1 Symposium format

The symposium was held over 2 days and hosted by partner KSG.

The first day was dedicated to the presentations of the last works of the project, a hybrid participation (in person and online) was organised for the participants.

For the second day, devoted to the demonstrations of the sCO2 loop and the simulator, only an in-person participation was possible (the various simulations and experiments proposed did not allow an online retransmission).

4.2 Agenda

The symposium agenda, shown in the tables below, covered all project results.

Table 2: Agenda Day 1: 8 June: Final Symposium - Focus on sCO2 loop in nuclear application

Start	End	Duration	Topic	Presenter
9:00	9:05	0:05	Welcome from host	Peter Lasch, KSG
9:05	9:20	0:15	Keynote – Euratom Research funded Projects on Severe Accidents	Angelgiorgio Iorizzo, European Commission, Euratom Research
9:20	9:45	0:25	Project Overview	Albannie Cagnac, EDF
9:45	10:15	0:30	sCO2 loop/Glass model: Test data, lessons learnt & validation of thermal-hydraulic codes	Frieder Hecker, GfS
10:15	10:45	0:30	Simulation of sCO2 loop with scaled-up components under accident scenario	Michael Buck, University of Stuttgart
10:45	***11:05***	***0:20***	***Coffee Break***	
11:05	11:50	0:45	Development of components: Turbomachine and heat exchangers	Haikun Ren, University of Duisburg-Essen & Sarah Tioual-Demange, Fives Cryo
11:50	***13:20***	***1:30***	***Lunch***	
13:20	14:05	0:45	Simulation of architecture of sCO2 loops integrated in NPP	Albannie Cagnac, EDF
14:05	14:50	0:45	Validation of sCO2-4-NPP loop in a virtual "KONVOI" PWR	Peter Lasch, KSG
14:50	***15:10***	***0:20***	***Coffee Break***	
15:10	15:40	0:30	Licensing requirements & regulatory framework	Andrej Prošek, Jožef Stefan Institute
15:40	16:25	0:45	Roadmap toward exploitation: Regulatory policy, requirements & way forward	Albannie Cagnac, EDF
16:25	17:00	0:35	Discussion on future related efforts & Conclusion	Albannie Cagnac, EDF (moderator)
17:00			***End of meeting***	

Table 3: Agenda Day 2: 9 June – Final Symposium – Site Visit – Demonstration Loop and Simulator

Start	End	Duration	Group A	Group B	Presenter
9:00	9:15	0:15	Welcome from host and safety instructions		Frieder Hecker
9:15	10:45	1:30	Tour of KONVOI simulator room: - Real-time coupled simulation of sCO2 heat removal system	Tour of Glass model and sCO2 HeRo loop: - Demonstration of heat transport and heat removal from glass model	Peter Lasch
10:45	***11:05***	***0:20***	***Coffee break***		
11:05	12:35	1:30	Tour of the glass model and sCO2 HeRo loop (as above)	Tour of KONVOI simulator room (as above)	Frieder Hecker
12:35	***14:05***	***1:30***	***Lunch***		

5 Discussion

A summary of the main discussion points from the first day of technical presentations is provided below.

5.1 EC Keynote

Angelgiorgio Iorizzo presented the current projects and future EURATOM programme related to severe accidents. Three projects start in 2022: SEAKNOT, ASSAS, and SASPAM-SA. The 2023-2025 Work Programme is currently under discussion among the Member States and should be finalized by the end of summer. There are typically open call topics to give the opportunity for consortia with new proposal ideas to apply.

5.2 Project progress

The final symposium was held 3 months before the official end of the project. The results presented are therefore for the most part final results, or about to be finalized (some final adjustments are underway on the models and simulator).

The last objectives, to validate the sCO2 loop in the simulator, to detail the roadmap toward exploitation, and to complete the independent review of licensing requirements are still ongoing.

The objectives for the Symposium were to show the project results and the challenged faced, with a demonstration of the experimental work done, and to present the future perspectives for this technology.

5.3 sCO2 loop/Glass model

Work on the sCO2 loop was presented during the first day of the Symposium. This work was completed during the first half of the project and has already been presented during the January 2022 public seminar.

The sCO2-HeRo loop at KSG was used within the sCO2-4-NPP project to test the turbomachine design, study the behaviour of sCO2, and demonstrate the heat removal capacity with a heat exchanger. Experimental data was gathered on loop behaviour with the turbomachine to then validate the system in ATHLET and CATHARE. ATHLET reproduced the behaviour well, Modelica reproduced it adequately and CATHARE reproduced one state, but could not provide the dynamics. Below a critical point, liquid becomes a dual phase and the codes were not able to continue to reproduce the behaviour of the system, which poses a problem for start-up. Thanks to the sCO2-HeRo loop glass model, the project partners were able to modify the sCO2 cycle and the turbomachine to bring the technology forward within the project.

On the second day of the symposium, a visit of the loop was made by the participants. The KSG-GfS partners presented the operation of the glass model, and performed some transients, such as the SBO (Station Black Out) accident, in order to show to all participants, the phenomena occurring at the nuclear reactor in this situation. The sCO2 loop could not be run, due to a shortage of CO2 at the supplier, but could be visited. The participants were able to examine the new turbocharger and the modifications made to the loop during the project.

Figure 4: Glass model demonstration

5.4 Simulation: sCO2 loop with scaled-up components

The simulation of the sCO2 loop with scaled-up components showed the heat removal capacity using zero to four sCO2 systems. Depending on the NPP type, three to four systems are necessary with sequential shutdown to adapt to the declining decay heat and extend the grace period beyond 72 hours.

Simulations of a scaled-up model were done to check behaviour, then the operational limits were defined and the control strategy was adapted accordingly. Some excess power can nevertheless be derived from the system. The input decks were built for NPP simulation: EPR with CATHARE (EDF), VVER-1000 with the ATHLET/Modelica coupled model (UJV, CVR) and KONVOI with ATHLET (USTUTT). A reference simulation of a Station Black Out (SBO) was done without the sCO2 system and the effect of adding one to four sCO2 modules was checked. In conclusion, at least three sCO2 system modules are needed to remove heat for about 10 hours. With four modules, all decay heat can be removed in 3 to 4 hours with the systems continuing for about 24 hours. After 40 hours, it can no longer provide electrical power. Therefore, a control strategy was needed to adapt to the decreasing decay heat. For a KONVOI type plant, four modules are proposed, one for each steam generator, with shutdown of each module in sequence. With this control strategy, the sCO2 heat removal system can function effectively for more than 72 hours after SBO.

5.5 Licensing requirements & regulatory framework

There is no international standard for the use of sCO2 equipment in the nuclear power industry. In the project, the approach was to take known standards (manuals, sub-components, testing, etc.) and give requirements to the partners upscaling components, i.e., to use class 3 or 2 materials.

Now, an independent assessment is underway comparing WENRA RL 2020, Issue Q: Plant Modifications and IAEA GSR Part 4 standard for safety aspects with the French and Czech requirements compiled for the sCO2 system in an NPP.

First elements of the regulatory roadmaps were also given by the partners.

5.6 Components development: Turbomachine and heat exchanger

For the turbomachine development, the objectives were to work on the conceptual design, the development, and the testing in the sCO2-HeRo loop. The new design has been validated and experimental and industrial experience were gained. The turbomachine concept is a TAC design, with turbine, alternator and compressor on one shaft and scaled up from the sCO2-HeRo project machine. The commissioning and the test results validate the design. 40,000 rpm have been reached. Magnetic bearings can be applied. Gas bearings were also investigated as an alternative with promising results. Tests compared the HeRo loop with the Susen loop and results obtained in the previous project (sCO2-4-HeRo). The tests in the Susen loop are further from the critical point. The new tests are much closer and show that the new turbomachine is more robust. The conclusions of the turbomachine study are potentially applicable in other areas as well, such as waste heat recovery, concentrated solar power, or other power applications when designing for an operating point with higher efficiency.

For the Diverse Ultimate Heat Sink (DUHS) (air), good agreement was obtained between the theoretical model and the experimental results.

A patent has been deposited for the Compact Heat Exchanger design, which is highly compact with multiple CO2 and steam inlets and outlets to “blind” hot and cold, and can achieve 10MW of heat transfer. FIVES produced small mock-ups for CVR to test them in their loop and to further optimize the design of the heat exchanger based on the test results. The CVR loop design changes are done and the compact Heat Exchanger will be tested before the end of the project.

5.7 Simulation: Architecture of sCO2 loops integrated in NPP

Modelling the compact heat exchanger in CATHARE-3 was challenging. The project results are based on simulation. The next step will be to test behaviours of scaled-up equipment, work on the start-up mode, and to both quantify and decrease the uncertainties. Retrofitting sCO2 modules to existing NPPs was determined to be possible, but the integration of modules in a new plant will clearly be more optimised.

5.8 Validation of sCO2-4-NPP loop in a virtual “KONVOI” PWR

Real-time simulation was a challenge. The coupling needs to be robust and to manage all situations. Partners agreed to use the FMI standard, which provides all required features. The standard was implemented and tested with a Functional Mock-up Unit (FMU) successfully. Several iterations of model update and exchange

have been made between partners CVR and KSG/GfS. Even with the current set-up, there are some real-time limitations that are still being worked on, e.g. push-up start simulation.

On the second day, a demonstration of the sCO2 system integrated in the KONVOI simulator was given by our partners. The participants could see how the sCO2 system works from a control room and that the operators could keep control of the plant to achieve a safe shutdown.

Figure 5: Demonstration of the sCO2 system integrated in a KONVOI simulator

5.9 Roadmap toward exploitation: Regulatory policy, requirements & way forward

Aging effects must be considered for the equipment qualification. sCO2 has a corrosive effect on materials.

Project experience has shown that the ways of working with safety authorities on qualification of new technologies differs somewhat depending on the country and can be taken into account for the regulatory roadmap.

An intermediate R&D step is needed to better understand 2-phase conditions and to make the system more reliable. Other non-nuclear sCO2 projects are also addressing these issues. Project partners are working to build an international community around the sCO2 technology, with partners of other projects focused on sCO2 in concentrated solar power and in waste heat recovery. All parties have similar issues and can benefit

from sharing problems encountered and solutions tested. Scale-up to a full-size pilot system is necessary to test solutions.

A hot standby system application could also be considered. Modularity and flexibility are the goal of the sCO2-4-NPP sCO2 system, which also makes the system more applicable to other uses.

5.10 Symposium Conclusion

Positive feedback was received from members of the audience on the considerations taken into account for the next steps of equipment qualification, on the multidisciplinary consortium, on the results achieved regarding safety aspects and on the development of components.

6 Conclusion

This deliverable presents the work related to the realization of the Final Symposium of the sCO2-4-NPP project. This symposium was held on 8 and 9 June 2022, in the premises of KSG-GfS and allowed the consortium partners to show publicly the scope of the work carried out, as well as two demonstrations related to the work of the project.

Appendix A Workshop Presentations

SCO2-4-NPP
Final Symposium
8th-9th June 2022, Essen, Germany

Euratom Research funded Projects on Severe Accidents

Angelgiorgio IORIZZO

Unit C.4–Euratom Research
DG Research & Innovation
European Commission

European Commission

Outline

- Horizon Europe and the Euratom R&T Programme
- Euratom Programme financial envelope 2021-2025
- Selection procedure for the Euratom funded Projects
- Eutatom Research Projects currently-recently funded on Severe Accidents - H2020
- Euratom Research incoming Projects on Severe Accidents - Horizon Europe

Horizon Europe and Euratom R&T

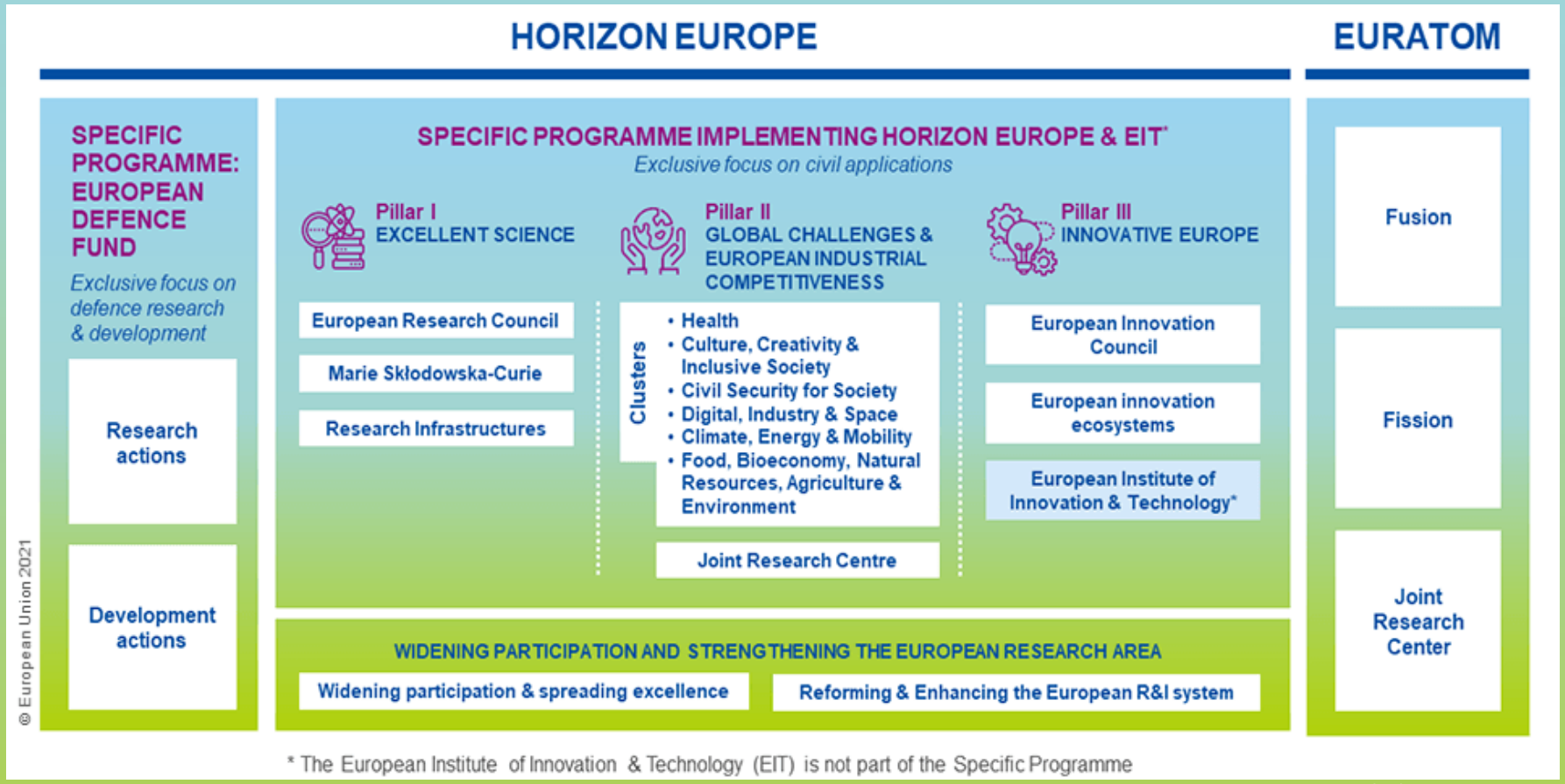

European Commission

Euratom Programme financial envelope 2021-2025

The financial envelope for the implementation of the ~~new~~ Euratom Programme 2021-2025 shall be **€1.382 billion in current prices.**

€583 million for indirect actions in fusion research and development

€266 million for indirect actions in nuclear fission, safety and radiation protection

€532 million for direct actions undertaken by the Joint Research Centre

Selection procedure for the Euratom Euratom funded Projects

The Euratom funded Research Projects are selected via a competitive process:

- The EC publishes calls for proposal
  (last one for 2021-2022;
  new one planned for 2023-2025, under discussion with Member States)
- Potential beneficiaries apply proposing research Projects
- Research projects are selected **for funding** by independent Experts panels

Euratom Research Projects currently-recently funded on Severe Accidents - H2020 (2014-2020)

- NARSIS II-III PSA (closed) 1.09.2017-28.02.2022 Total cost:~ 5.5 m. Euros
- MUSA II-III SA Uncertainties Severe Accidents 1.06.2019-31.05.2023 Total cost:~ 5.9 m. Euros
- PIACE II-III SA Passive Isolation Condenser 1.06.2019-31.05.2022 Total cost:~ 3.2 m. Euros
- R2CA II-III PSA Design Basis / Ext. Accident 1.09.2019-31.08.2023 Total cost:~ 4.2 m. Euros
- sCO2-4-NPP II-III SA SCO2 Heat removal 1.09.2019-31.08.2022 Total cost:~ 2.8 m. Euros
- BESEP II-III PSA Benchmark 1.09.2022-29.02.2024 Total cost:~ 2.8 m. Euros
- AMHYCO II-III SA H2 Accident Management 1.10.2022-30.09.2024 Total cost:~ 4 m. Euros
- McSAFER SMRs 1.09.2020-31.08.2023 Total cost:~ 4 m. Euros

TOTAL= 32.4 m. €

NARSIS NFRP-2016-2017-1

New **A**pproach to **R**eactor **S**afety **I**mprovement**S**

Closed project

Start date-End date:	1 September 2017-28 February 2022 (closed)
Total cost:	€ 5 493 096,35
EU contribution:	€ 4 965 472,14
Number of participants:	21
Coordinated by:	COMMISSARIAT A L ENERGIE ATOMIQUE ET AUX ENERGIES ALTERNATIVES (France)

- Probabilistic Safety Assessment (PSA) procedures allow to better understand and estimate the likelihood of the most causes prone to initiate nuclear accidents and to identify the most critical elements of the systems.
- However, despite of the remarkable reliability of current procedures, the 2011 Fukushima Daiichi accident highlighted a number of challenging issues with respect to their application and to the validity of their results.
- From this nuclear disaster the upgrading of the current methodological framework appeared to be necessary in areas such as cascading/conjunct events characterization, fragility analyses and uncertainties treatment. New developments in those areas would even enable the extension of their use in accident management.

NARSIS NFRP-2016-2017-1

New **A**pproach to **R**eactor **S**afety **I**mprovement**S**

- Based on recent theoretical progresses, the NARSIS project aimed at making significant scientific updates of some elements required for the PSA, focusing on external natural events (earthquake, tsunami, flooding, high speed winds).
- These improvements mainly concern:
  - Natural hazards characterization, considering concomitant external (simultaneous-yet-independent or cascading) events, and the correlation in intra-event intensity parameters
  - Fragility and functionality assessment of main critical NPPs' elements, accounting for conjunct effects (including ageing effects) and interdependencies under single or multiple external aggressions
  - Risk integration combined with uncertainty characterization and quantification, to allow efficient risks comparison and account for all possible interactions and cascade effects
  - Better processing/integration of expert-based information within PSA, through modern uncertainty theories both to represent in flexible manner experts' judgments and to aggregate them to be used in a comprehensive manner.
  - The proposed improvements was tested and validated on simplified and real NPP case studies. Demonstration supporting tools for operational & severe accident management will be also provided.

MUSA NFRP-2018

Management and **U**ncertanties of **S**evere **A**ccidents

Start date-End date:	1 June 2019-31 May 2023
Total cost:	€ 5 929 652,50
EU contribution:	€ 3 186 503,05
Number of participants:	29
Coordinated by:	CENTRO DE INVESTIGACIONES ENERGETICAS, MEDIOAMBIENTALES Y TECNOLOGICAS-CIEMAT (Spain)

Detecting uncertainties in severe accident management

- The continuous efforts to raise nuclear safety to the highest standards possible has pointed the need to assess the methodologies used in severe accident simulation.
- The overall objective of the MUSA project is to assess the capability of severe accident codes when modelling reactor and SFP (Spent Fuel Pool) accident scenarios of Gen II and Gen III reactor designs.
- To do so UQ (Uncertainty Quantification) methodologies are to be used, with emphasis on the effect of already-set and innovative accident management measures on accident unfolding, particularly those related to ST (Source Term) mitigation.
- Therefore, ST related FOM (Figures Of Merit) are to be used in the UQ application.
- Given the focus of FOM on source term, the project will identify variables governing ST uncertainties that would be worth investigating further.

PIACE NFRP-2018

Passive **I**sol**a**tion **C**ond**e**nser

Start date-End date:	1 June 2019-31 May 2022
Total cost:	€ 3 210 439,81
EU contribution:	€ 2 247 229,76
Number of participants:	11
Coordinated by:	AGENZIA NAZIONALE PER LE NUOVE TECNOLOGIE, L'ENERGIA E LO SVILUPPO ECONOMICO SOSTENIBILE (Italy)

- The main objective is to support the technology transfer from the research to industry in the area of safety of nuclear installations.
- An Innovative Decay Heat Removal System for nuclear reactors, presently under technology validation in relevant environment (SIRIO facility), will be scaled-up to achieve a system prototype demonstration in operational environment, relevant for LFRs/ADSs and LWRs.

R2CA NFRP-2018

Reduction of **R**adilogical **C**onsequences of design basis and design extension **A**ccidents

Start date-End date:	1 September 2019-31 August 2023
Total cost:	€ 4 156 896,25
EU contribution:	€ 3 184 940,82
Number of participants:	16
Coordinated by:	INSTITUT DE RADIOPROTECTION ET DE SURETE NUCLEAIRE (France)

Updating European nuclear safety methodologies in light of new risks

- Nuclear power plants can produce cost-effective and emission-free electricity around the clock.
- About a quarter of all electricity and half of the low-carbon electricity in the EU is currently generated with nuclear energy.
- Nuclear safety is an EU priority, and the EU-funded R2CA project is supporting this with an eye on both operating and future nuclear power plants.
- The focus is on developing methods to reassess safety margins considering new risks that may have arisen from the original designs or extensions to them.
- Based on evaluations, the team is also identifying new accident management measures and technologies to reduce the radiological consequences of emergency situations.

sCO2-4-NPP NFRP-2018

Innovative **sCO2**-based heat removal technology **for** an increased level of safety of **N**uclear **P**ower Plants

Start date-End date:	1 September 2019-31 August 2022
Total cost:	€ 2 786 971,25
EU contribution:	€ 2 352 452,01
Number of participants:	10
Coordinated by:	ELECTRICITE DE FRANCE (France)

Heat removing in nuclear power plants

- Removing heat from nuclear reactors is an essential step in energy generation.
- The effectiveness of that process depends on many factors including the cooling agents used.
- The main aim of the EU-funded project sCO2-4-NPP is to introduce and commercialize innovative technology for heat removal in nuclear power plants.
- Technology used in the sCO2-4-NPP initiative will provide a backup cooling system, attached to the principal steam-based cooling system, which considerably delays or eliminates the need for human intervention in the case of accidents.
- Its compact size and the modularity of the system, allows the innovative technology to be fitted into existing nuclear power plants. It can also be included in nuclear power plants under development.

BESEP NFRP-2019-2020

Benchmark **E**xercise on **S**afety **E**ngineering **P**ractices

Start date-End date:	1 September 2020-29 February 2024
Total cost:	€ 2 759 701,25
EU contribution:	€ 2 759 701,25
Number of participants:	6
Coordinated by:	TEKNOLOGIAN TUTKIMUSKESKUS VTT OY (Finland)

Developing best practices to keep nuclear stations running

- In the EU, most operational nuclear power plants were built in the 1970s and 1980s and they were designed to last around 40 years.
- Preparing nuclear power plants for old age is a top priority to keep them longer and safer.
- The BESEP project will develop best practices for safety requirements' verification against external hazards.
- It will use an efficient and integrated set of safety engineering practices and probabilistic safety assessment.
- The project aims to provide clear guidance on the closer connection of deterministic and probabilistic safety analysis and human factors engineering for the determination and realistic quantification of safety margins.
- The findings will provide guidance for more sophisticated safety analysis methods, such as upgrades of simulation tools.

AMHYCO NFRP-2019-2020

Towards an henanced **A**ccidnt **M**anagement of the **HY**drogen/**CO** combustion risk

Start date-End date:	1 October 2020-30 September 2024
Total cost:	€ 4 071 051,25
EU contribution:	€ 3 974 402,50
Number of participants:	12
Coordinated by:	UNIVERSIDAD POLITECNICA DE MADRID (Spain)

Updating safety guidelines for nuclear power plants

- Nuclear power plants are designed to minimize the risk of radiological releases. In addition, severe accident management guidelines (SAMGs) have been developed and implemented to provide operators with a systematic guidance on mitigatory actions.
- Building on these guidelines, the EU-funded AMHYCO project considers practical issues to further reduce (as much as possible) the threat posed by combustion of gases generated during accidents on containment integrity.
- It will improve the SAMGs for both in-vessel and ex-vessel phases using numerical and experimental results.
- It will also experimentally study the phenomena that are difficult to predict numerically (such as H2/CO/H20 distribution and combustion).
- A third goal will be to improve the predictability of the numerical tools used for explosion hazard evaluation.

❖ McSAFER

https://cordis.europa.eu/project/id/945063

- Project McSAFER **(High-Performance Advanced Methods and Experimental Investigations for the Safety Evaluation of Generic Small Modular Reactors)** focuses on safety aspects for LW-SMRs and in particular on technical challenges for the core and for the Reactor Pressure Vessel (RPV).
- Experimental campaigns are foreseen and development of numerical tools.
- CNEA from Argentina participates in this project. CNEA currently contract an SMR prototype in Argentina.

- Ongoing from the Euratom Work Programme (WP) 2019-2020
- Duration 36 months, Start date 1 September 2020 End date 31 August 2023
- EC contribution € 4 million circa - Overall budget € 4 045 133,75
- Coordinated by KARLSRUHER INSTITUT FUER TECHNOLOGIE (Germany)

Euratom Research incoming Projects on Severe Accidents - Horizon Europe (2021-2027)

- SEAKNOT II-III SA Knowledge Management 1.10.2022 - 48 months Total cost:~ 2.8 m. Euros
- SASPAM-SA II-III SA SMR Emergency Management 1.10.2022 - 48 months Total cost:~ 3.8m. Euros
- ASSAS II-III SA Simulator PWR 1.11.2022 - 48 months Total cost:~ 3.7 m. Euros

TOTAL= 10.3 m. €

SEAKNOT HE-2021-NRT-01

SEvere **A**ccident research and **KNO**wledge managemen**T** for LWR

Duration:	48
Fixed start date:	1 October 2022
Total budget:	€ 2,726,993.75
Total requested EC contribution:	€ 2,158,778.00
Number of participants:	17
Coordinator:	CENTRO DE INVESTIGACIONES ENERGETICAS, MEDIOAMBIENTALES Y TECNOLOGICAS-CIEMAT (Spain)

Keywords

Severe Accidents, Phenomena Identification Ranking Table, Experimental Infrastructures, Knowledge and know-how transfer

SEAKNOT HE-2021-NRT-01

SEvere **A**ccident research and **KNO**wledge managemen**T** for LWR

- Severe Accidents (SA) are known to dominate the risk associated with the commercial production of nuclear energy and a vast amount of research has been done for decades in order to practically eliminate SAs with the potential for large early releases.
- At present time, when some of the knowledge acquired is at risk of being lost (as many specialists have already retired or are retiring) and new approaches for the SA assessment are being explored, it seems appropriate timing to deeply review and document the sound existing background and project it into the future, including an update on experimental research on SA mitigation tools.
- By putting in place the best resources possible to conduct any needed additional research and by articulating the most efficient ways possible to bring the young generation on board to face near- and mid-term research challenges, the best use of the current SA background with guarantees to target those issues bearing most uncertainties nowadays might be ensured.

SEAKNOT HE-2021-NRT-01

SEvere **A**ccident resercah and **KNO**wledge managemen**T** for LWR

- Therefore, it is of utmost relevance to conduct a firm assessment of the current State-of-the-Art and to pass this onto the generation who are inheriting such legacy. Management, exploitation, and assessment of this knowledge, are the main objectives of the SEAKNOT project.
- In addition, new emerging research needs, as those concerning Small Modular Light Water Reactors (SMLWR) and Accident Tolerant Fuels (ATF), will be considered.
- Meeting SEAKNOT objectives requires entails carrying out a deep, critical assessment of the current state of the art of the experimental infrastructure and analytical tools that would be necessary to efficiently tackle the challenges posed.
- The main expected outcomes will be: a sound and critical analysis of the current knowledge on SA.
- An update of the experimental research needs remaining;
- A strengthening of background and skills of young generations in the field.

SASPAM-SA HE-2021-NRT-01

Safety **A**nalysis of SMR with **PA**ssive **M**itigation strategies - **S**evere **A**ccident

Duration:	48 months
Fixed start date:	1 October 2022
Total budget:	€ 3,816,038.75
Total requested EC contribution	€ 2,991,694.00
Number of participants:	22
Coordinator:	AGENZIA NAZIONALE PER LE NUOVE TECNOLOGIE, L'ENERGIA E LO SVILUPPO ECONOMICO SOSTENIBILE - ENEA (Italy)

Keywords

SMR, iPWR, Severe accident, IVMR, Containment Integrity, Source Term, Emergency planning zone

SASPAM-SA HE-2021-NRT-01

Safety **A**nalysis of SMR with **PA**ssive **M**itigation strategies - **S**evere **A**ccident

- Small Modular Reactors (SMR) are one of the key options for the near-term deployment of new nuclear reactors.
- Currently in Europe there is a growing interest towards the deployment of SMRs, and several activities are underway in many countries preparing for possible licensing needs.
- In particular, Integral Pressurized Water Reactor (iPWR) are ready to be licensed as new builds because they start from the well-proven and established large Light Water Reactor (LWR) technology, incorporate their operational plant experience/feedback, and include moderate evolutionary design modifications to increase the inherent safety of the plant.
- However, despite the reinforcement of the first three levels of the Defence-in-Depth (DiD), e.g., with the adoption of passive safety systems, a sound demonstration of iPWR ability to address Severe Accidents (SA) should be carried out (DiD levels 4-5).
- The main objectives of the project will be to transfer and adapt such knowledge and know-how to iPWR, in view of the European SA and Emergency Planning Zone (EPZ) analyses.

SASPAM-SA HE-2021-NRT-01

Safety **A**nalysis of SMR with **PA**ssive **M**itigation strategies - **S**evere **A**ccident

- The main elements considered are:
  I. the identification of plausible SA scenarios for iPWRs with the related conditions in the vessel and in the containment,
  II. the study of the applicability of the existing experimental databases to iPWR and identify new experimental needs,
  III. the assessment of the capability of internationally recognized European and Non-European computational tools (largely used in Europe) to describe the behavior of the most promising iPWR designs during SA scenarios, and
  IV. the prediction of the resulting radiological impact on- and off-site, taking into account special SA mitigation/management strategies.
- The expected outcomes of the project will help speeding up the licensing of iPWRs in Europe, as well as the siting processes of these reactors in light of their possible use near densely populated areas.

ASSAS HE-2021-NRT-01

Artificial intelligence for the **S**imulation of **S**evere **A**ccident**S**

Duration:	48 months
Fixed start date:	1 November 2022
Total budget:	€ 3,700,350.00
Total requested EC contribution:	€ 3,008,132.00
Number of participants:	14
Coordinator:	INSTITUT DE RADIOPROTECTION ET DE SURETE NUCLEAIRE (France)

Keywords

Artificial Intelligence, severe accident, simulator, knowledge transfer, surrogate models, human-machine interface, digital twin, accident mitigation systems

ASSAS HE-2021-NRT-01

Artificial intelligence for the **S**imulation of **S**evere **A**ccident**S**

- The ASSAS project aims at developing a proof-of-concept SA (severe accident) simulator based on ASTEC (Accident Source Term Evaluation Code).
- The prototype basic-principle simulator will model a simplified generic Western-type pressurized light water reactor (PWR).
- It will have a graphical user interface to control the simulation and visualize the results.
- It will run in real-time and even much faster for some phases of the accident.
- The prototype will be able to show the main phenomena occurring during a SA, including in-vessel and ex-vessel phases.
- It is meant to train students, nuclear energy professionals and non-specialists.
- In addition to its direct use, the prototype will demonstrate the feasibility of developing different types of fast-running SA simulators, while keeping the accuracy of the underlying physical models.
- Thus, different computational solutions will be explored in parallel.
- Code optimization and parallelization will be implemented.

ASSAS HE-2021-NRT-01

Artificial intelligence for the **S**imulation of **S**evere **A**ccident**S**

- Beside these reliable techniques, different machine-learning methods will be tested to develop fast surrogate models.
- This alternate path is riskier, but it could drastically enhance the performances of the code.
- A comprehensive review of ASTEC's structure and available algorithms will be performed to define the most relevant modelling strategies, which may include the replacement of specific calculations steps, entire modules of ASTEC or more global surrogate models.
- Solutions will be explored to extend the models developed for the PWR simulator to other reactor types and SA codes.
- The training data-base of SA sequences used for machine-learning will be made openly available.
- Developing an enhanced version of ASTEC and interfacing it with a commercial simulation environment will make it possible for the industry to develop engineering and full-scale simulators in the future.
- These can be used to design SA management guidelines, to develop new safety systems and to train operators to use them.

European Commission

Thank you for your attention!

Innovative sCO2-Based Heat Removal Technology for an Increased Level of Safety of Nuclear Power Plants

Final Symposium

8th – 9th June 2022

PROJECT OVERVIEW

Albannie CAGNAC, EDF

Joerg STARFLINGER, University of Stuttgart

SYMPOSIUM OBJECTIVES

- Present the project's achievements
- Show the challenges that the consortium had to face
- Present the experimental work that has been carried out
- Present the perspectives on this technology

SCO2-HEAT REMOVAL SYSTEM

The vision: sCO2-System

- Electricity made out of decay heat
- Modular
- Self-starting
- Self-sustaining
- Retrofittable for existing PWR, BWR, …
- Innovative power conversion system for SMR, GEN IV…

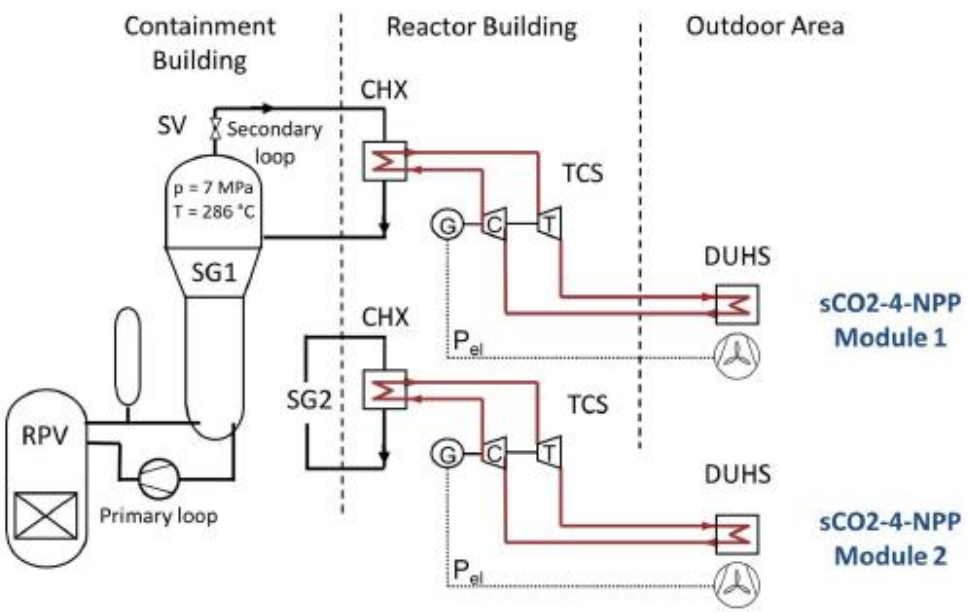

Project Objective: Development of an Innovative sCO2-Based Heat Removal Technology for an Increased Level of Safety of Nuclear Power Plants

GENERAL OBJECTIVES

- Enhanced sCO2 Heat Removal system validation
  - Validation of the sCO2 models with 2 codes : ATHLET and CATHARE (french code)
  - Validation on PWR reactors like western reactors with the 2 codes
  - Operation of the system integrated into PWR simulator

- Preparation of the industrial scaling up
  - Specification of upscaled components for implementation in a full-scale NPP
  - Final design of the system architecture integrated to a real design of PWR reactor
  - Licensing roadmaps and licensing requirements for the upscaled components and the overall system

PROJECT MILESTONES

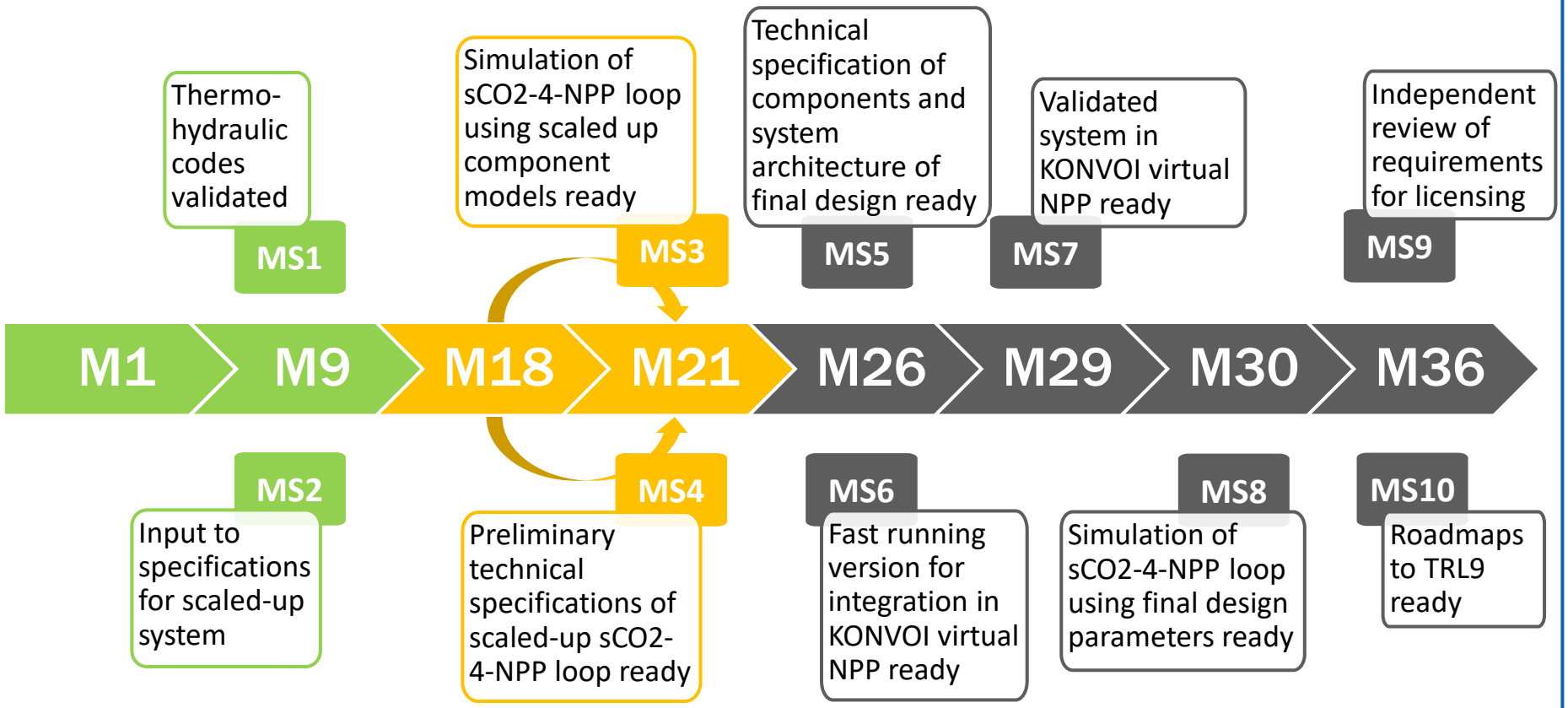

- Delays due to COVID Situation, and some simulation difficulties

SPECIFIC OBJECTIVES AND ASSOCIATED TASKS

- Objective 1: Validation of sCO2 models in thermal-hydraulic system codes on lab scale
  - Test and data generation on performance of sCO2-HeRo system ✔
  - Validation of ATHLET, ATHLET/Modelica and CATHARE codes ✔
- Objective 2: Specification of an upscaled system, boundary conditions and simulations for implementation of sCO2-4-NPP loop in a full-scale NPP (PWR)
  - Definition of initial and boundary conditions for SBO accident ✔
  - Simulation of sCO2-4-NPP loop using scaled-up component models ✔
- Objective 3: Preparation of a licensing roadmap of the sCO2-4-NPP system to ensure compliance with application regulation
  - Identification of the regulatory elements to be considered in the design of components and system and for reference plant modification on heat recovery system installation ✔
  - Design bases and safety analyses for system and component and Requirements for testing and operation ✔
  - Independent review of requirements

SPECIFIC OBJECTIVES AND ASSOCIATED TASKS

- Objective 4: Design of components for the sCO2-4-NPP loop in the context of licensing requirements
  - Improvement and Design of the sCO2-4-NPP turbomachine ✓
  - Conceptual design of the heat exchangers ✓
  - Optimisation of the heat sink HX and heat recovery exchanger ✓
  - Qualification according to Nuclear requirements for Turbomachinery and HX
- Objective 5: Final design of the system architecture of sCO2-4-NPP integrated in a full-scale NPP
  - System architecture design parameters ✓
  - Thermodynamic cycle design ✓
  - Simulation of sCO2-4-NPP loop in a real NPP using real design parameters ✓
  - Dynamic simulations and control system modifications ✓
  - Real-time simulations for implementation in PWR simulator

SPECIFIC OBJECTIVES AND ASSOCIATED TASKS

- Objective 6: Validation of sCO2-4-NPP loop in a virtual “relevant nuclear environment” PWR
  - Defining Interface for sCO2 system code to be implemented to simulator
  - Implementation of sCO2-system code into PWR simulator environment
  - Running Transients
- Objective 7: Prepare technical, regulatory, financial and organisational roadmaps to bring sCO2-4-NPP to market
  - Technological roadmap to reach TRL9
  - Regulatory roadmap to reach TRL9
  - Financial and organisational roadmap to reach TRL9

Innovative sCO2-Based Heat Removal Technology for an Increased Level of Safety of Nuclear Power Plants

Final Symposium

08th – 09th June 2022

TEST DATA, LESSONS LEARNT AND VALIDATION OF THERMAL HYDRAULIC CODES

Frieder Hecker, GfS

CONTENT

THE HERO LOOP

CO2-PROBLEMS

DATA FOR BENCHMARK CALCULATION

WP1

HERO-LOOP (SIMPLIFIED)

- Test turbomachinery (TAC)
- Demonstrate heat removal (CHX)
- Study CO_2

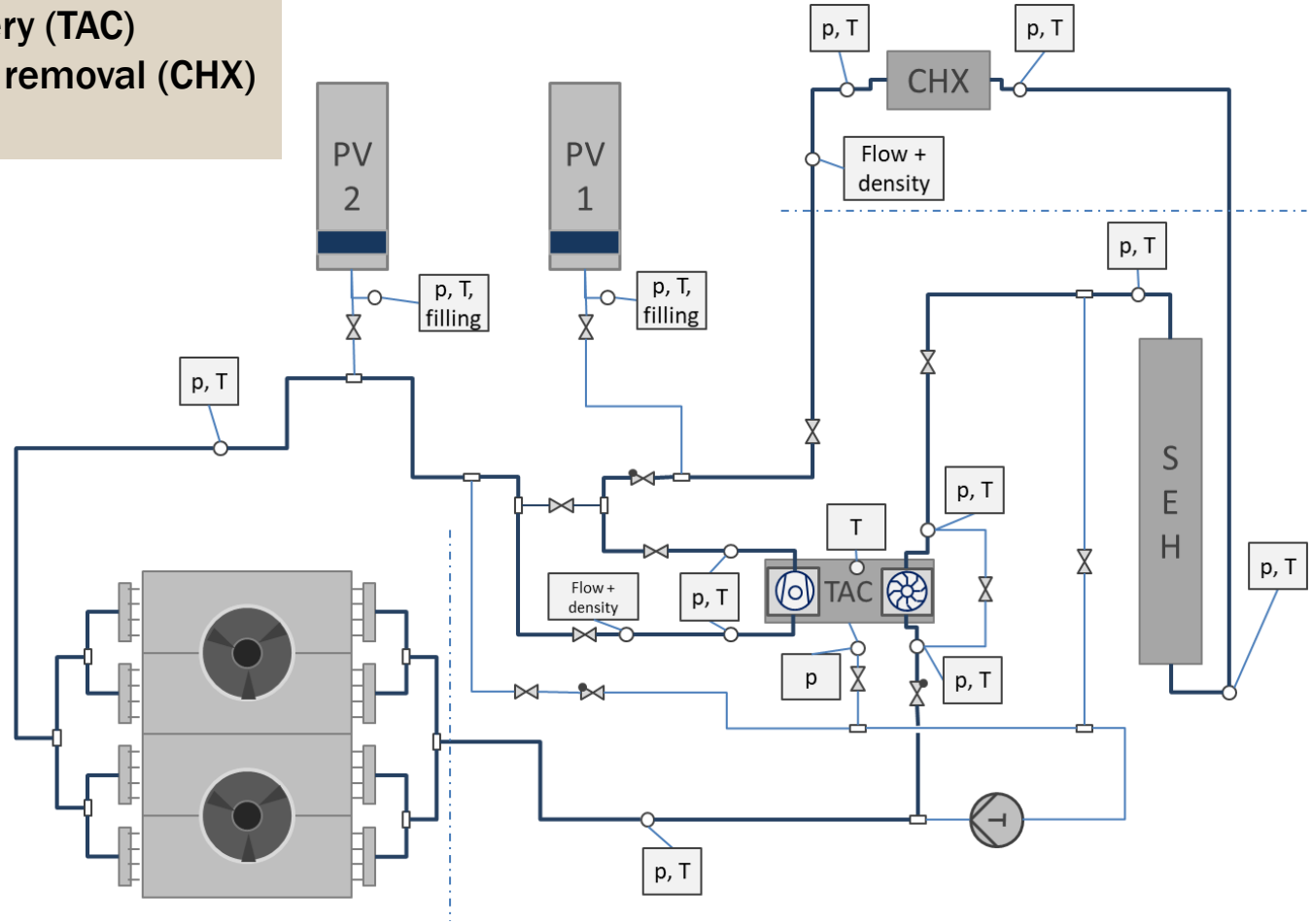

TURBOMACHINERY

- ~5 kW_{el}
- up to 50 000 rpm
- cooled internally by leakage flow

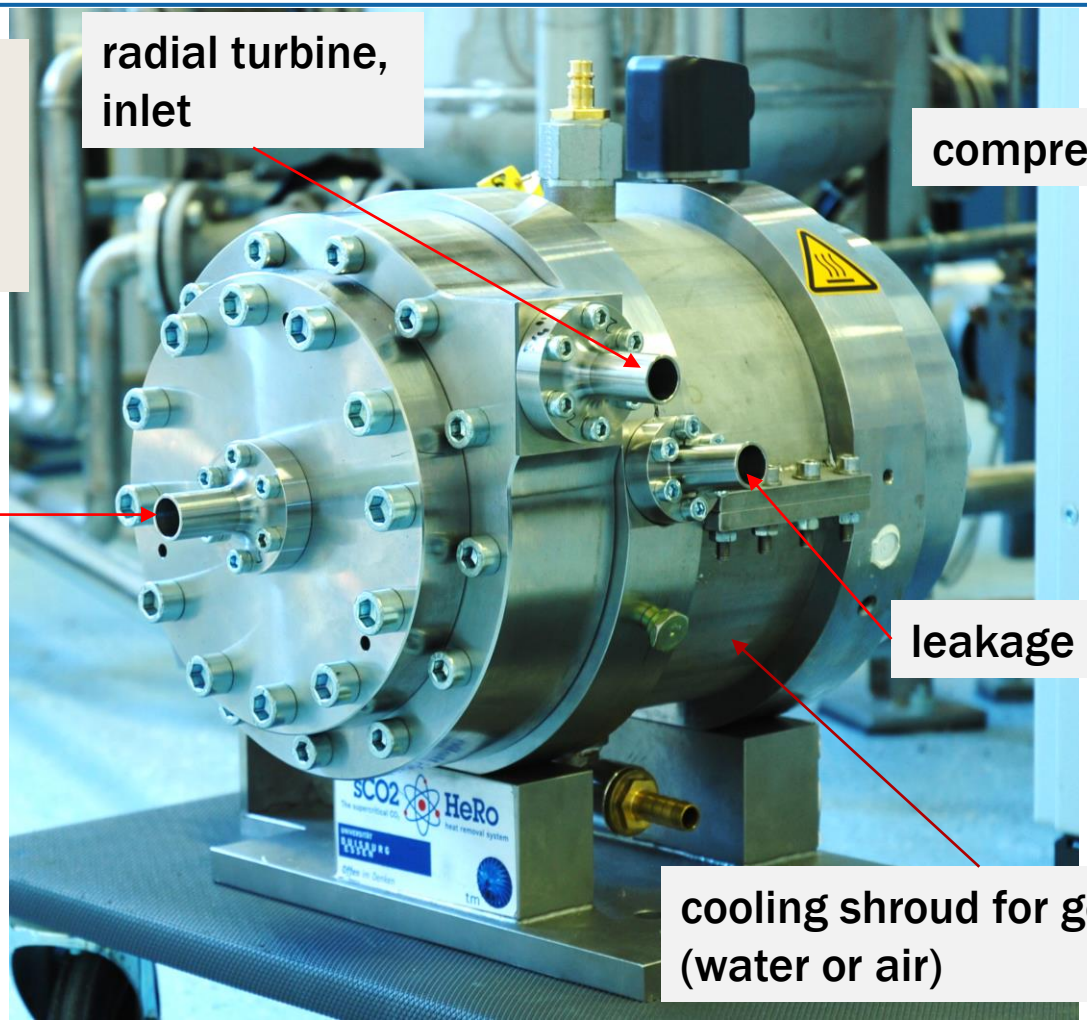

GLASS MODEL AND CHX

CHX,
> 15 kW

condensate
backflow

Coriolis:
flow and
density

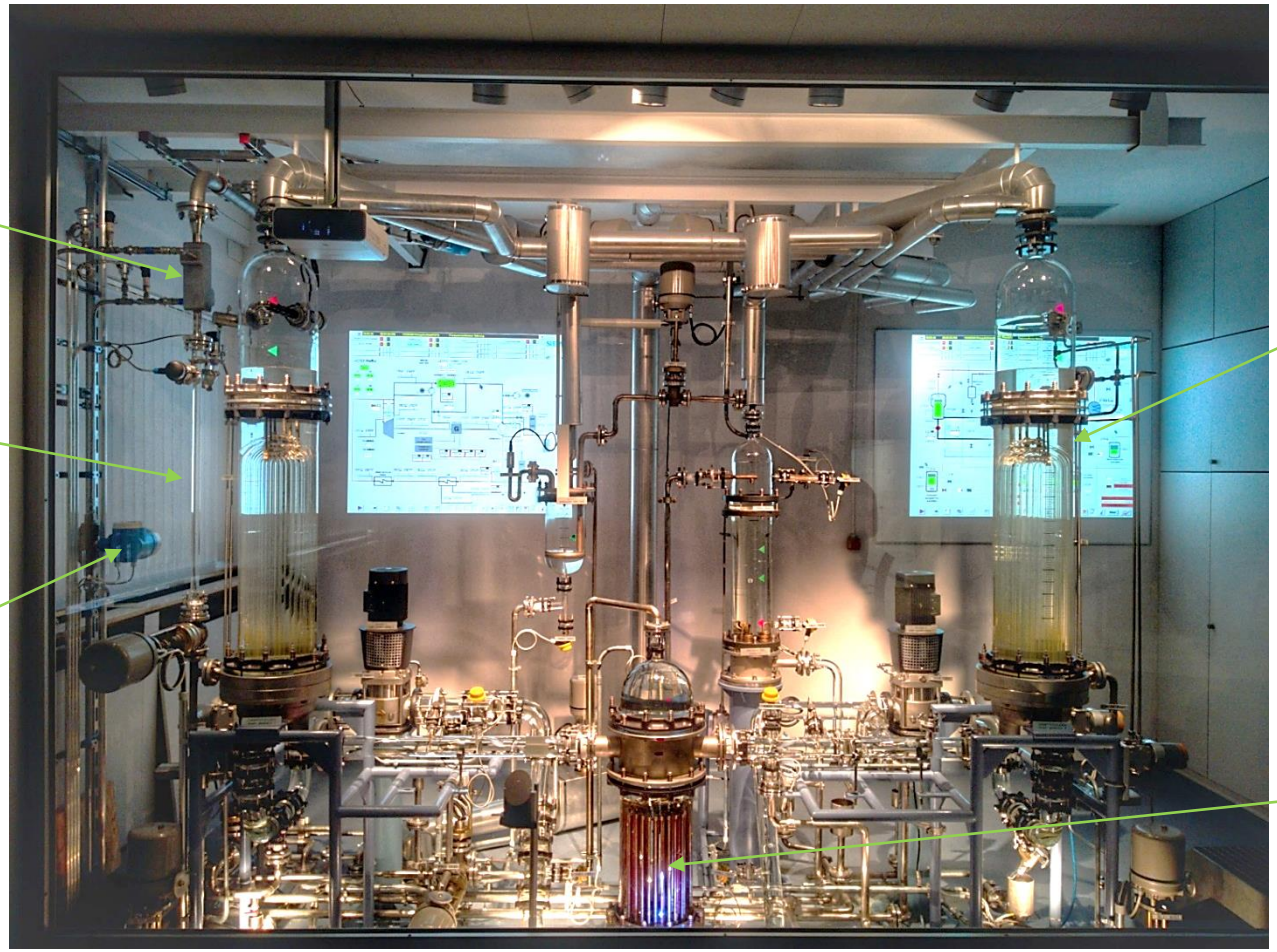

steam
generator

reactor,
up to
60 kW

CHX WITH SENSORS

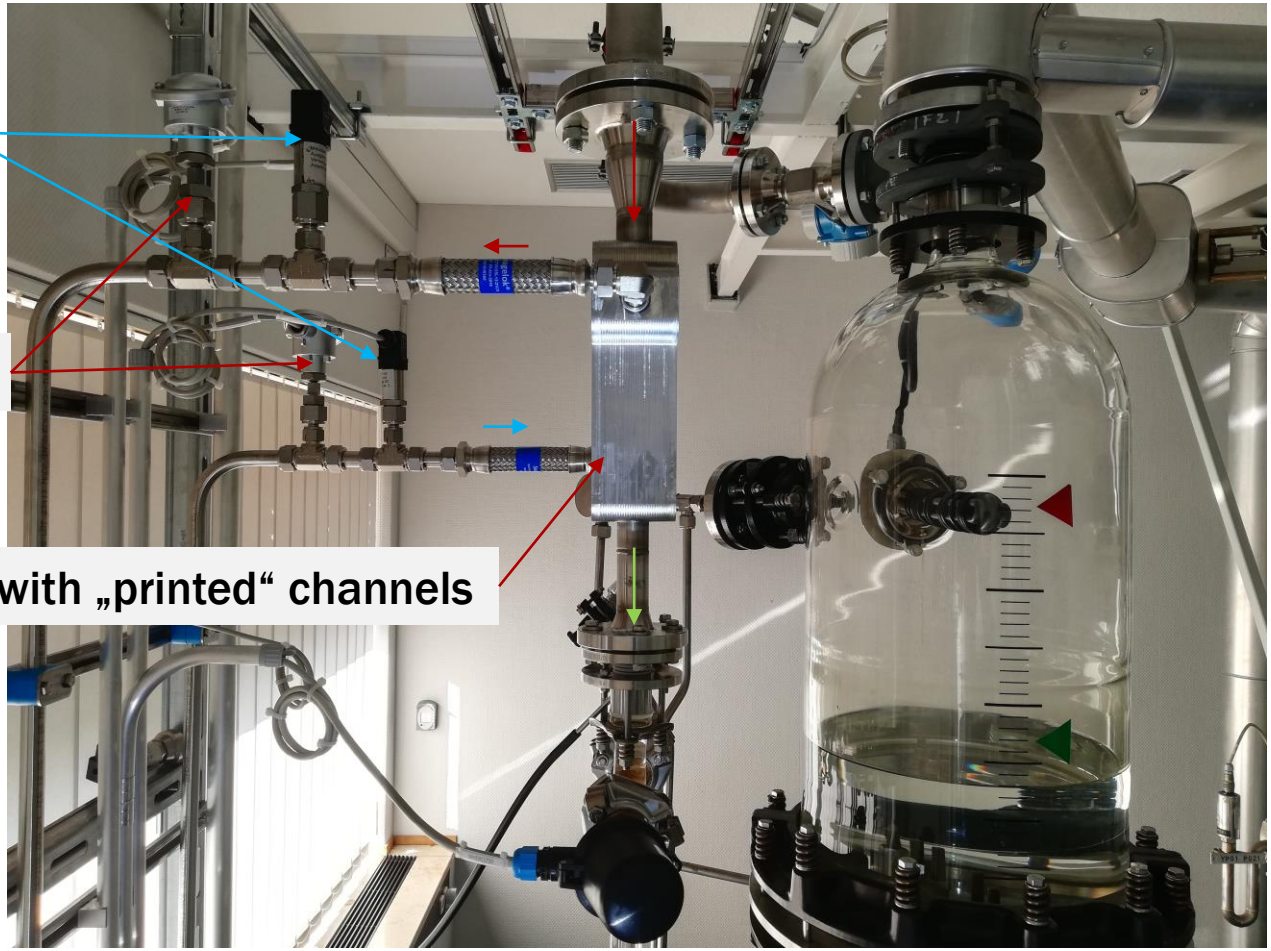

CONDENSATE BACKFLOW

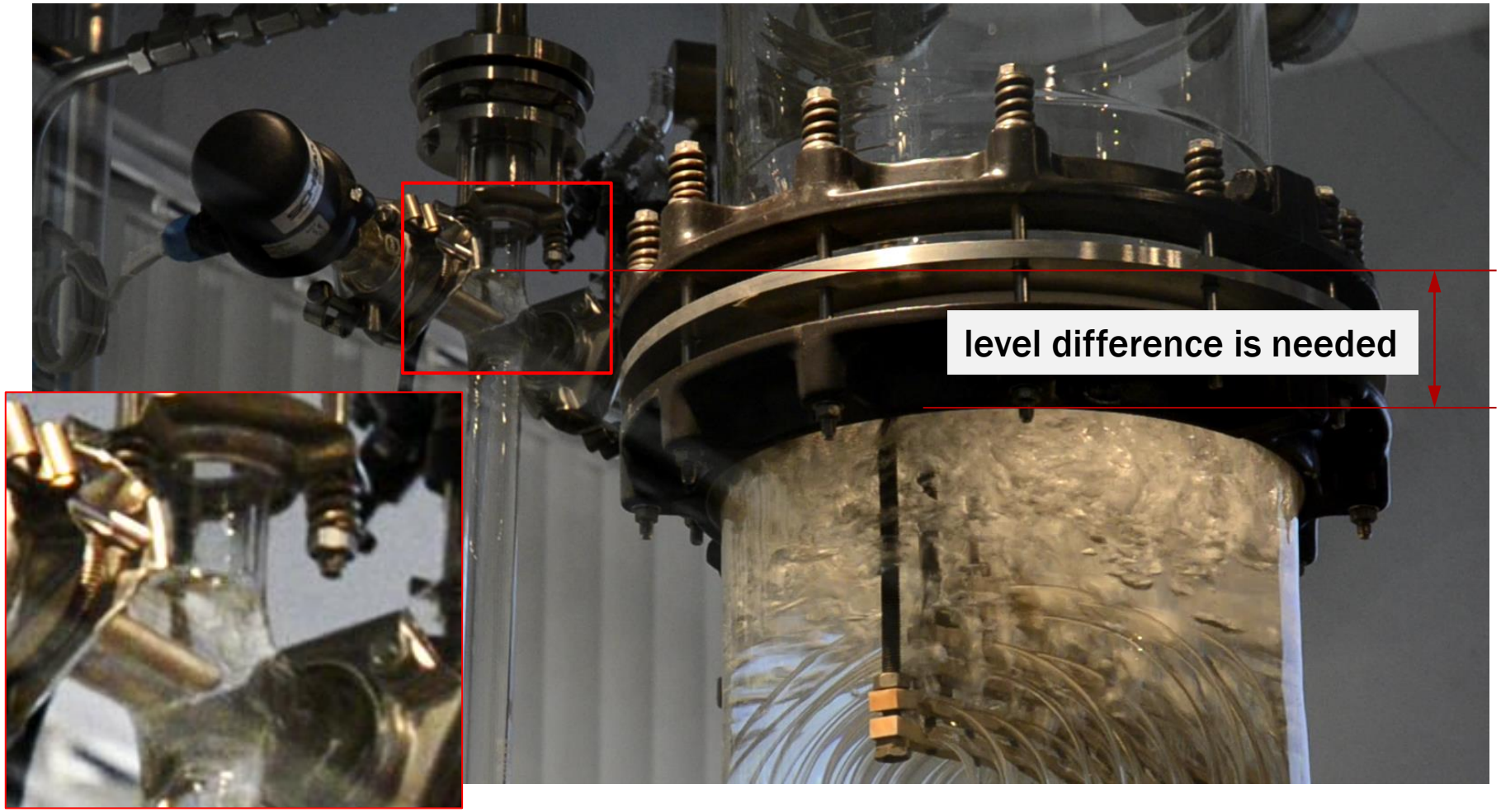

DATA PLANNED

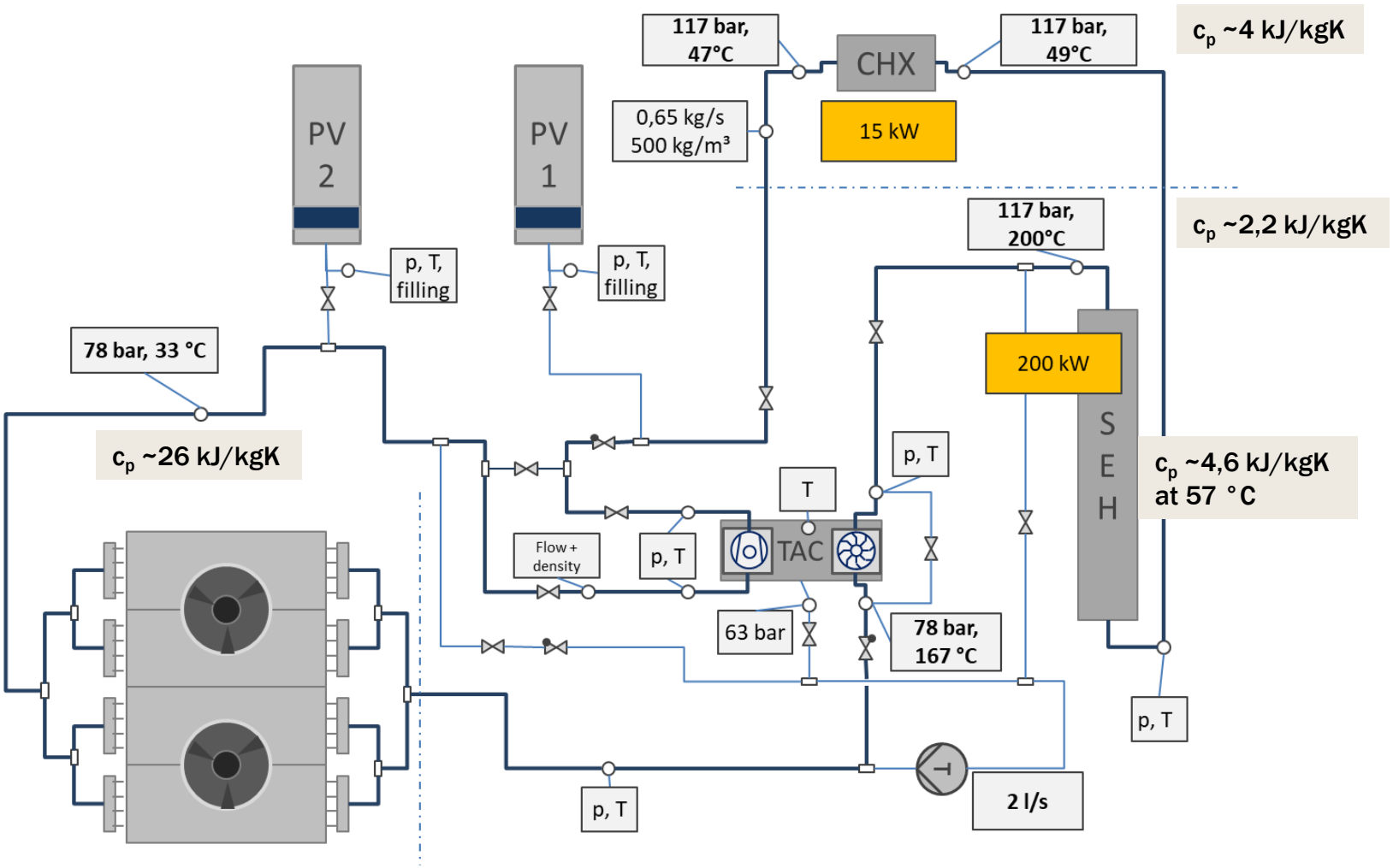

SLAVE ELECTRICAL HEATER

HEAT SINK

LEAKAGE (INNER COOLING OF TAC)

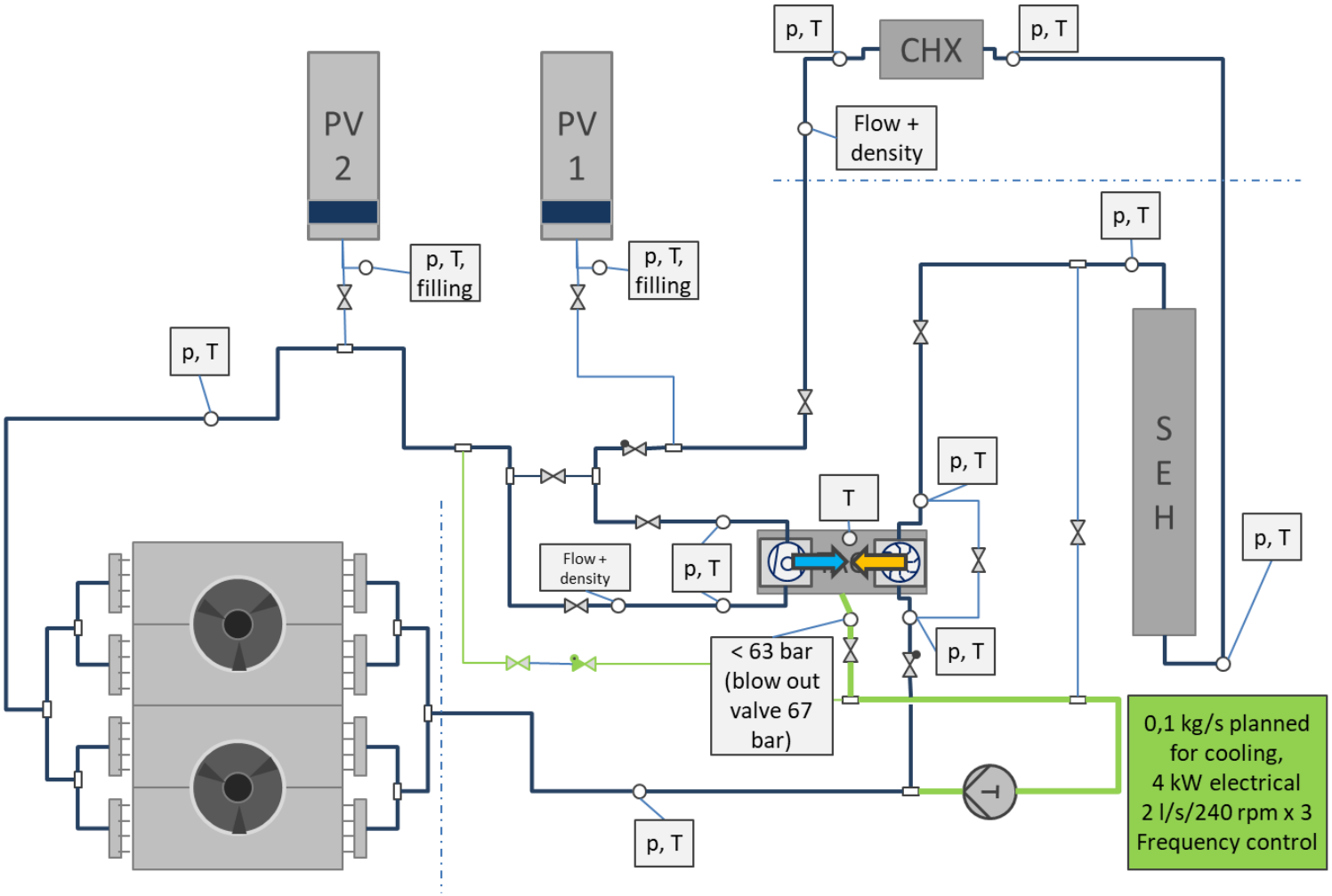

TRIPLEX PUMP (FREQUENCY CONTROLLED)

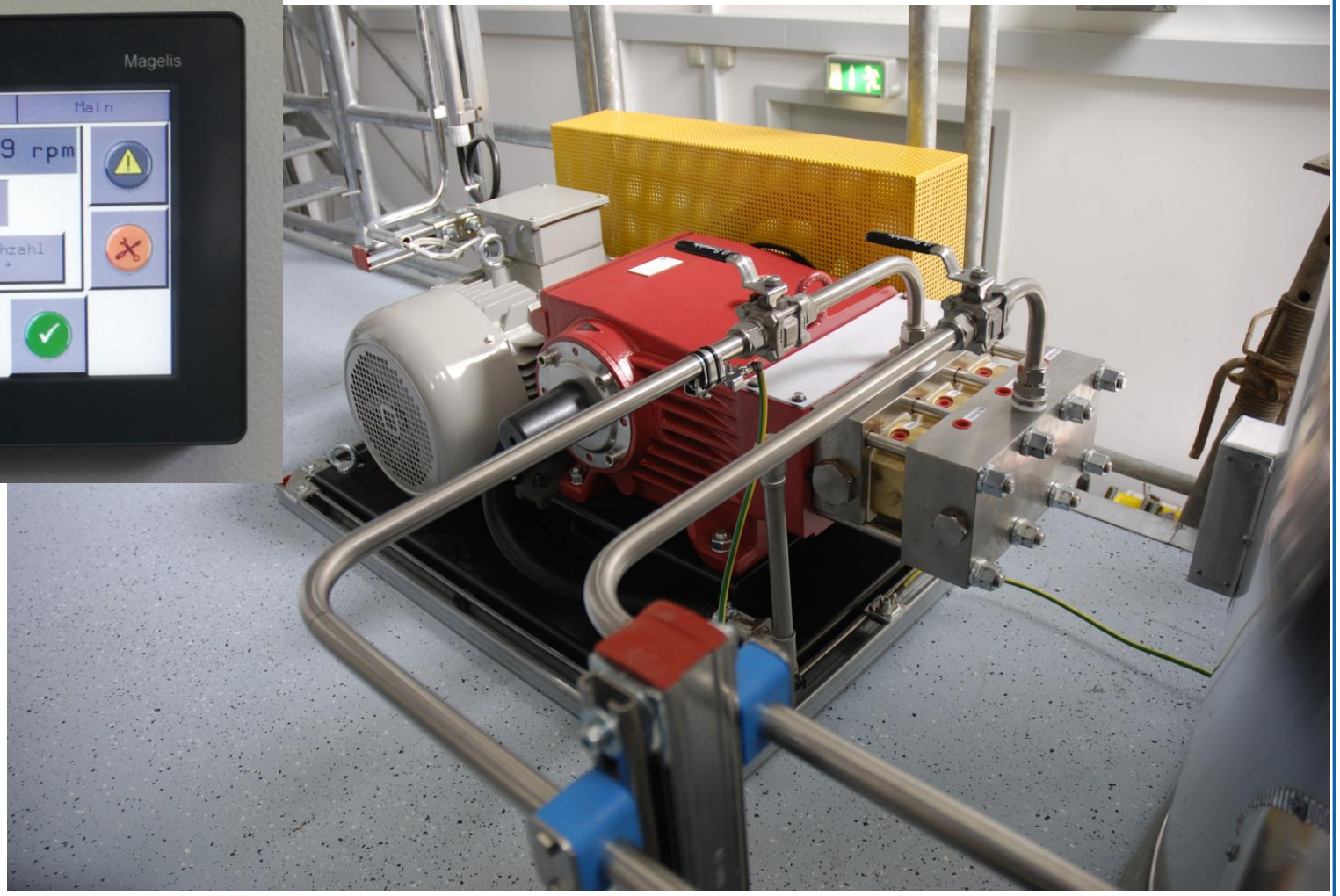

PISTON PRESSURE VESSELS

ELEVATION OF COMPONENTS

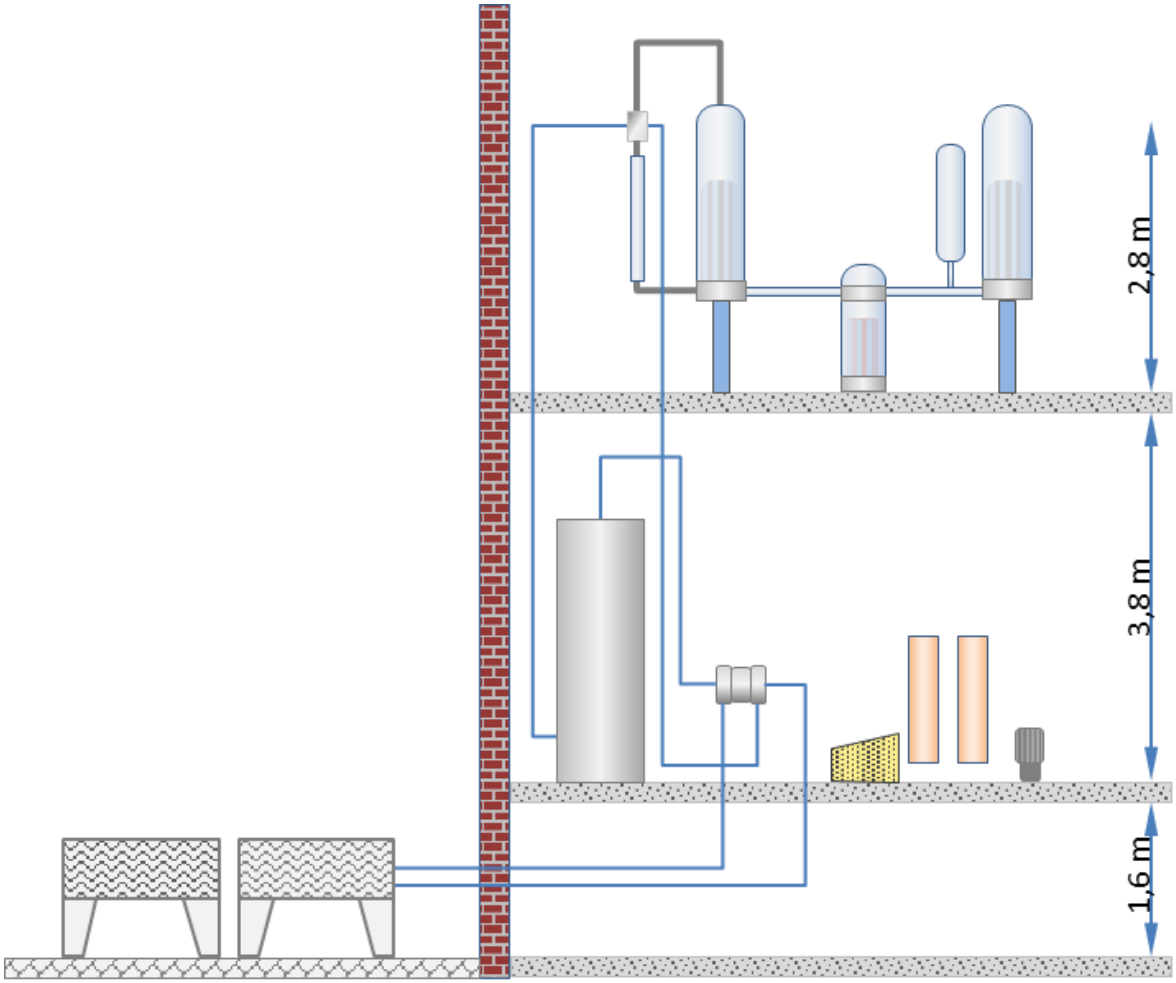

WP1(UDE)

Collection of data

and

validation of the

thermal hydraulic

system codes

Deliverable 1.1

Data on behaviour of the sCO2-HeRo-loop and the glass model (UDE, confidental)

Deliverable 1.2

Report on the validation status of codes and models for simulation of sCO2-HeRo loop (USTUTT, Public)

LEARN TO HANDLE THE CO2-SYSTEM (DATA ON BEHAVIOUR)

Some Problems:

- Filling and Mass content
- Dual phase vs. supercritical state
- Loss of CO2 from small leaks
- Impurities and foreign bodies
- Valve characteristics
- Measuring errors
- Vibrations and oscillations

FILLING AND MASS CONTENT

- Balancing the mass of CO2 filled from bottles
- Heating the bottles with a shroud (60°C max)
- Getting about 8 of 10 kg in 2 h
- Collecting liquid phase in UHS outside (and/or SEH inside, if summer)
- Pressure and success depends on outside temperature

CIRCULATING: MASS CONTENT BY DENSITY

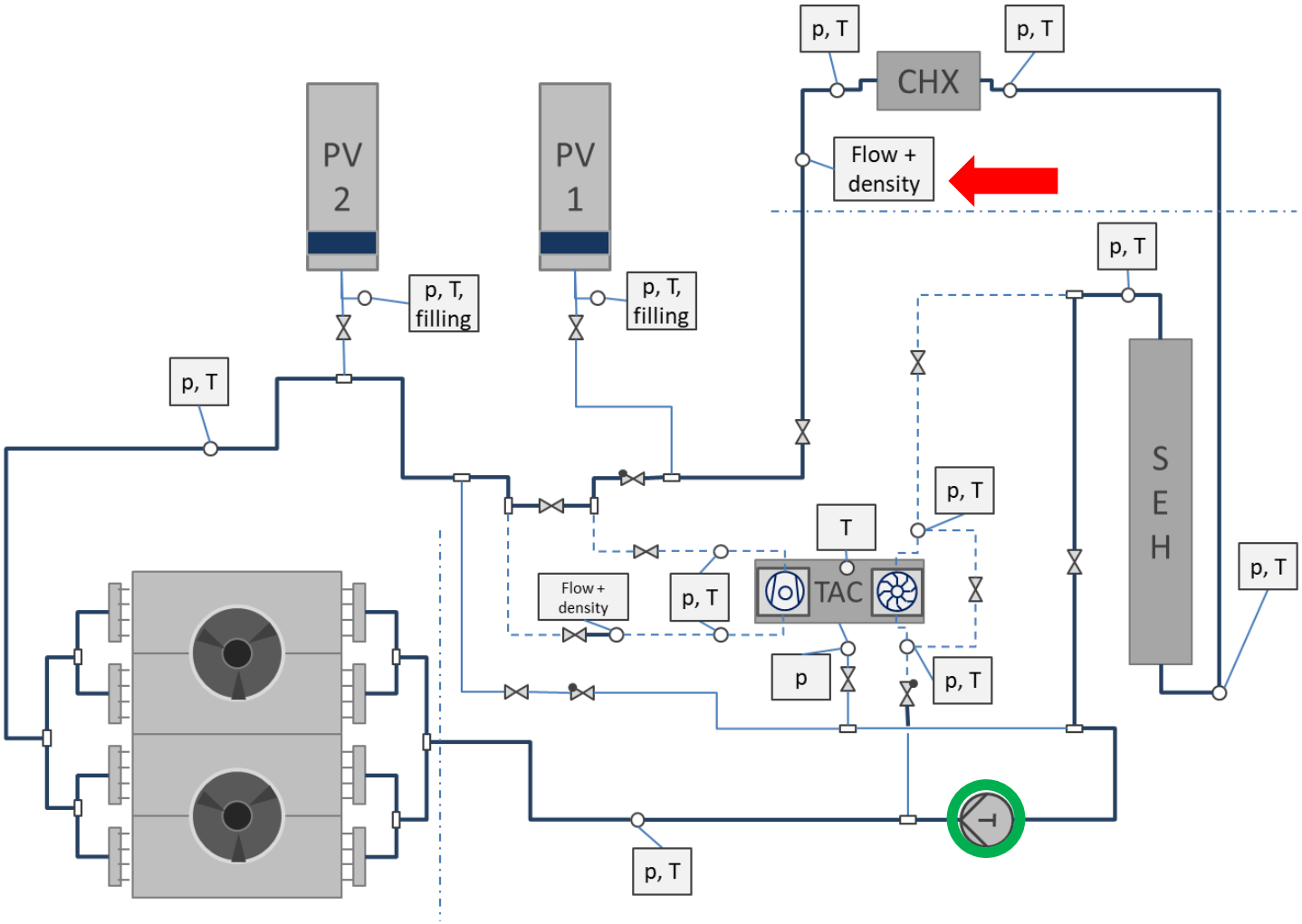

CIRCULATING A MIXTURE – PHASE SEPARATION

Circulating supercritical would allow some control about the mass, but needs heat source (> 31 °C)

Phase separation ?
Long vertical line

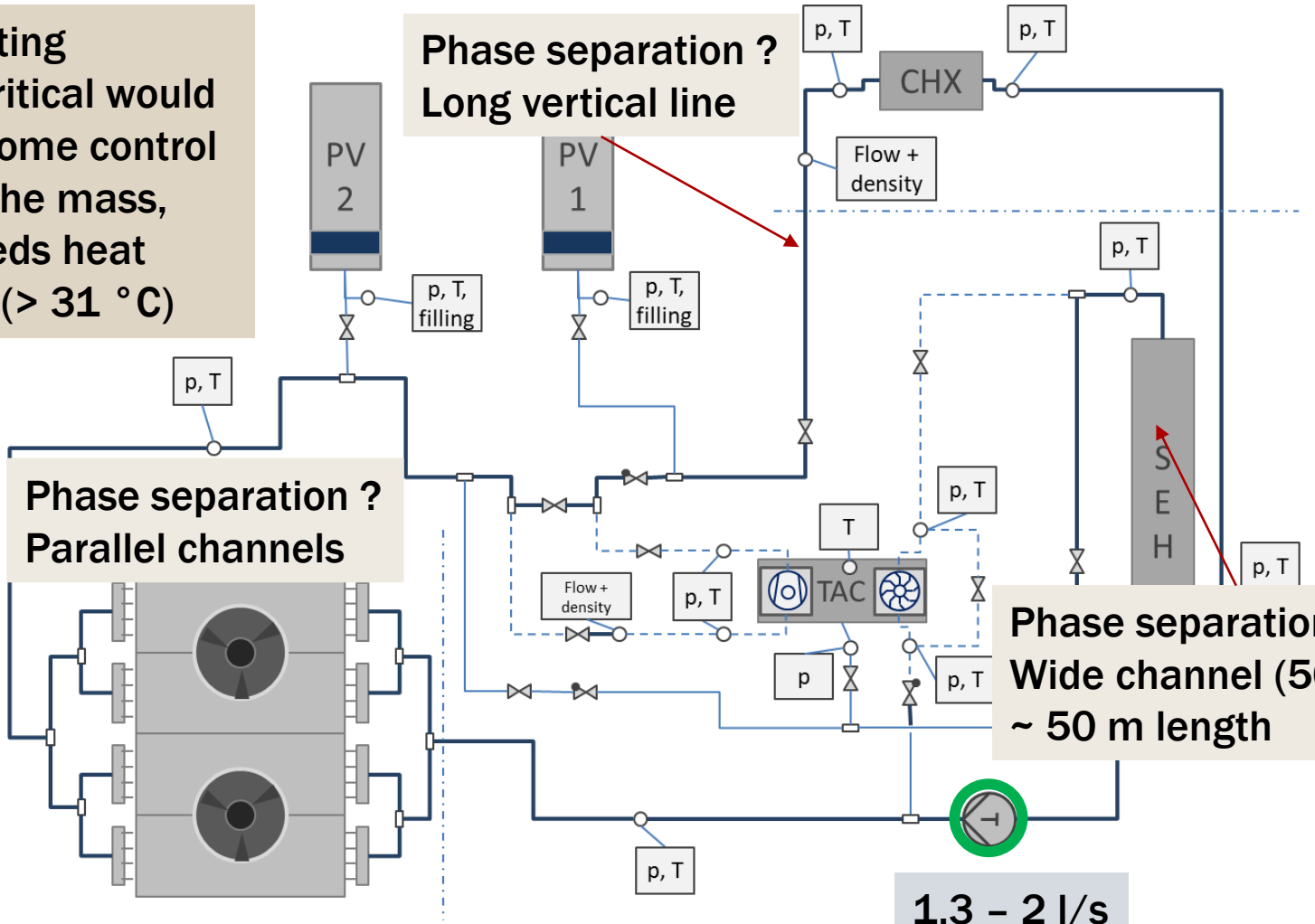

Phase separation ?
Parallel channels

Phase separation ?
Wide channel (50 mm), ~ 50 m length

1.3 – 2 l/s

LEAKAGE (EVERYWHERE)

Regular (~400 g/d, gaseous state, undetectable)

- Valve shafts
- Untight valve body
- Piston pump
- …

Extraordinary (detectable)

- Degraded seals/ fittings
- Cable gland
- Untight pipe connections
- …

CABLE LEAKAGE

Burst isolation of a flex

Improved cable gland, massive wire

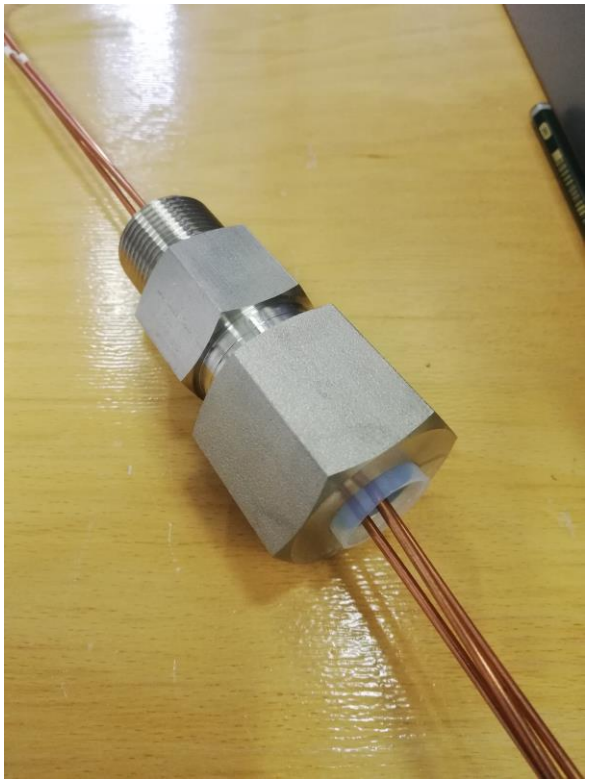

LEAKAGES

Oil & water (from CO2)

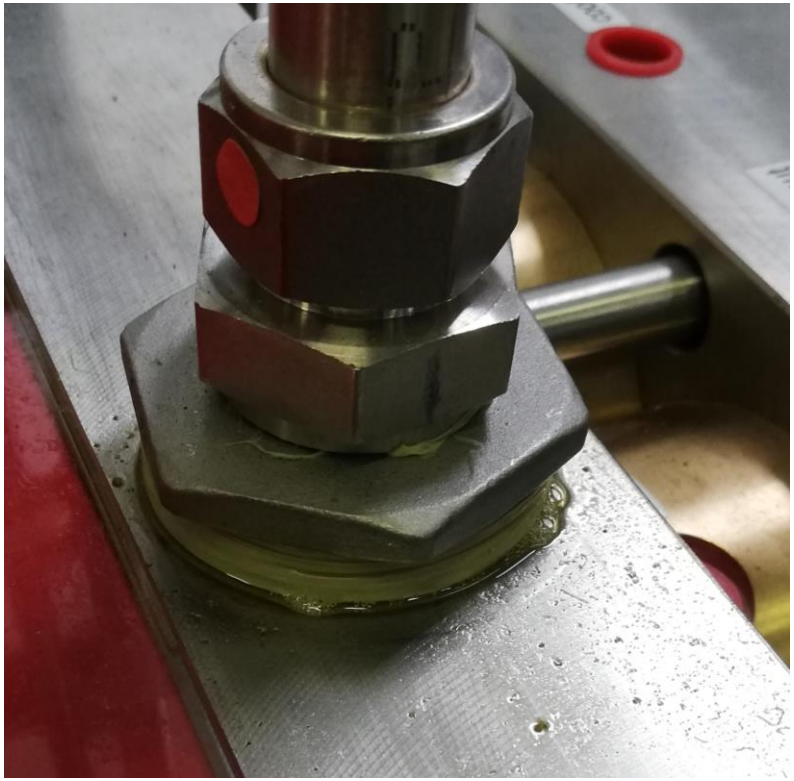

Leakage detection at generator

DISSOLVED SUBSTANCES

PP outlet valves

Graphite? (Turbine)

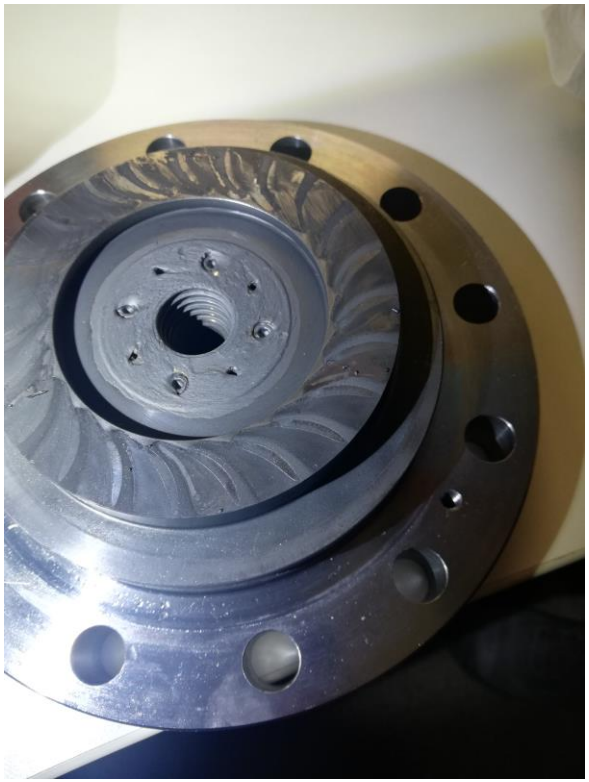

FOREIGN PARTICLES

From inlet of CP

Filter (since WP4)

„LINEAR CHARACTERISTIC“ (MAYBE, FOR WATER)

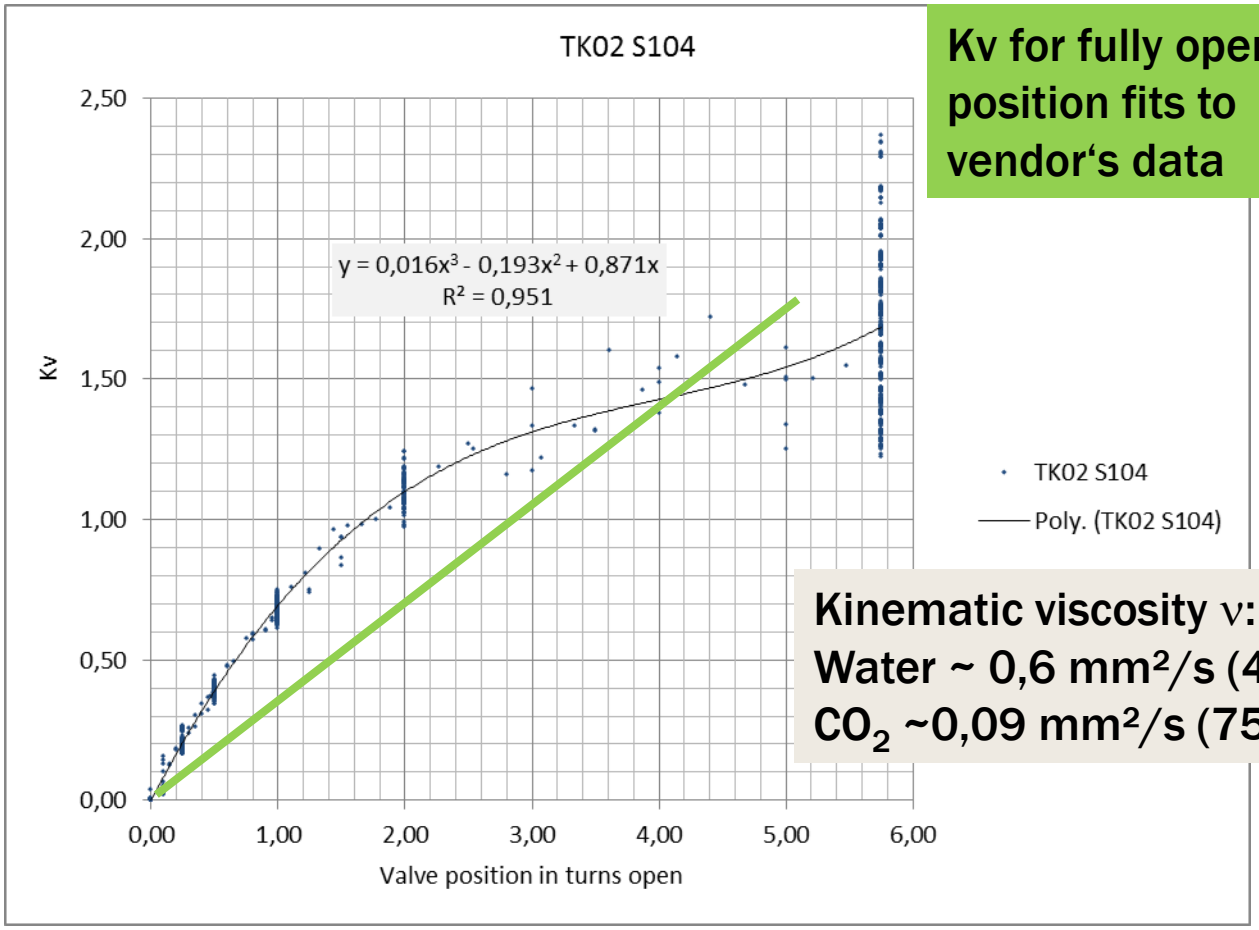

Kv for fully open position fits to vendor‘s data

Kinematic viscosity ν:
Water ~ 0,6 mm²/s (45 °C)
CO_2 ~0,09 mm²/s (75 bar, 45 °C)

MEASURING ERROR

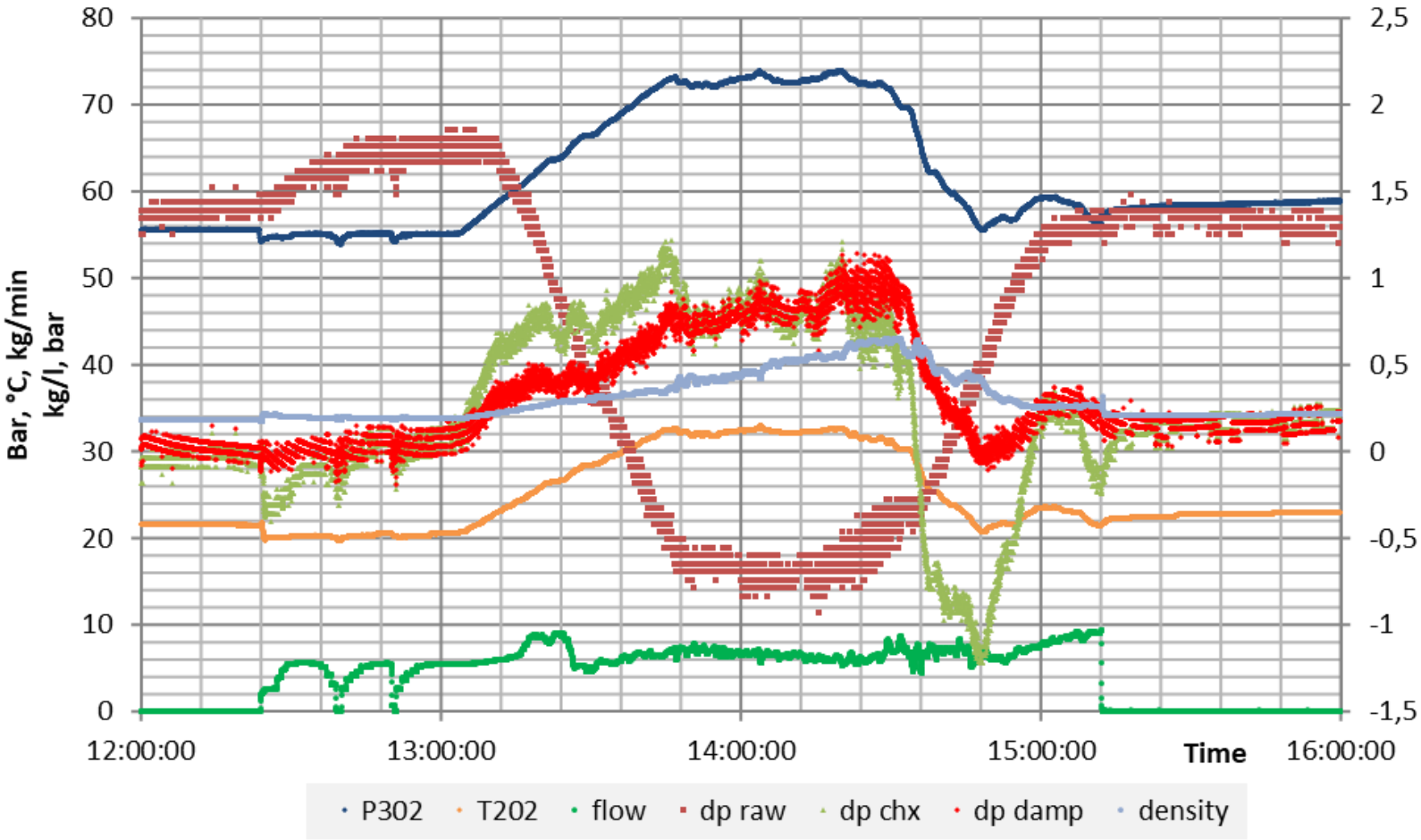

TEMPERATURE MODEL

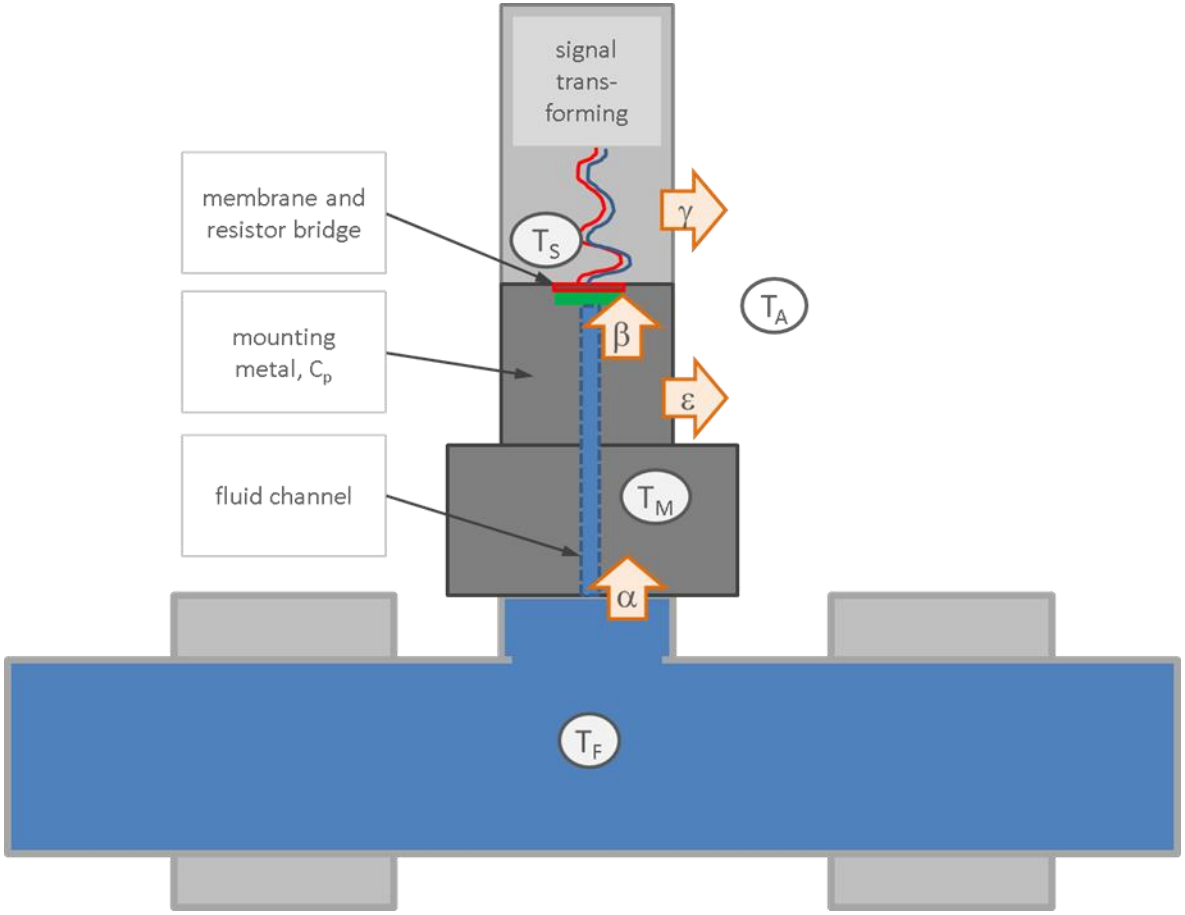

COMPENSATION

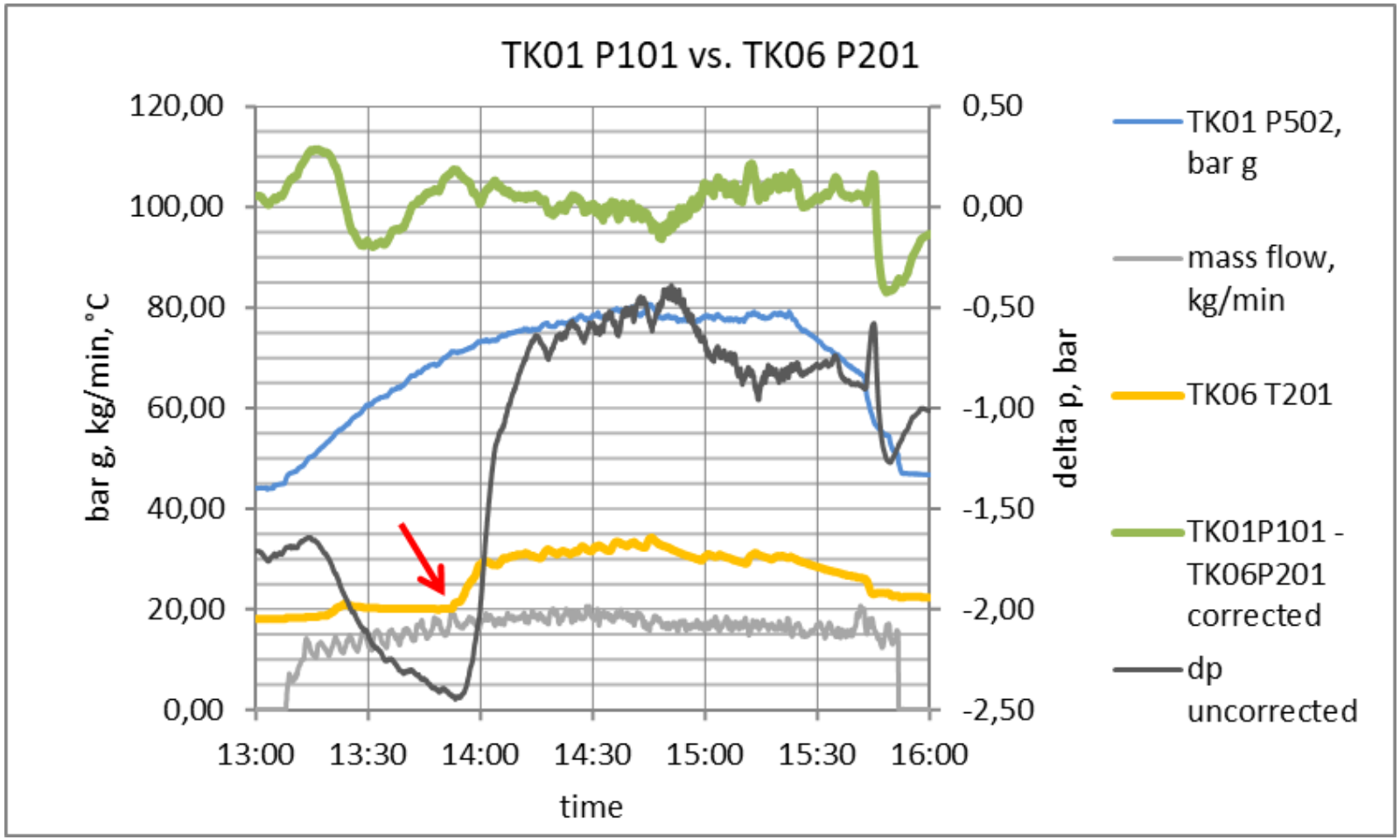

THEN: BLIND TEST FOR BENCHMARK

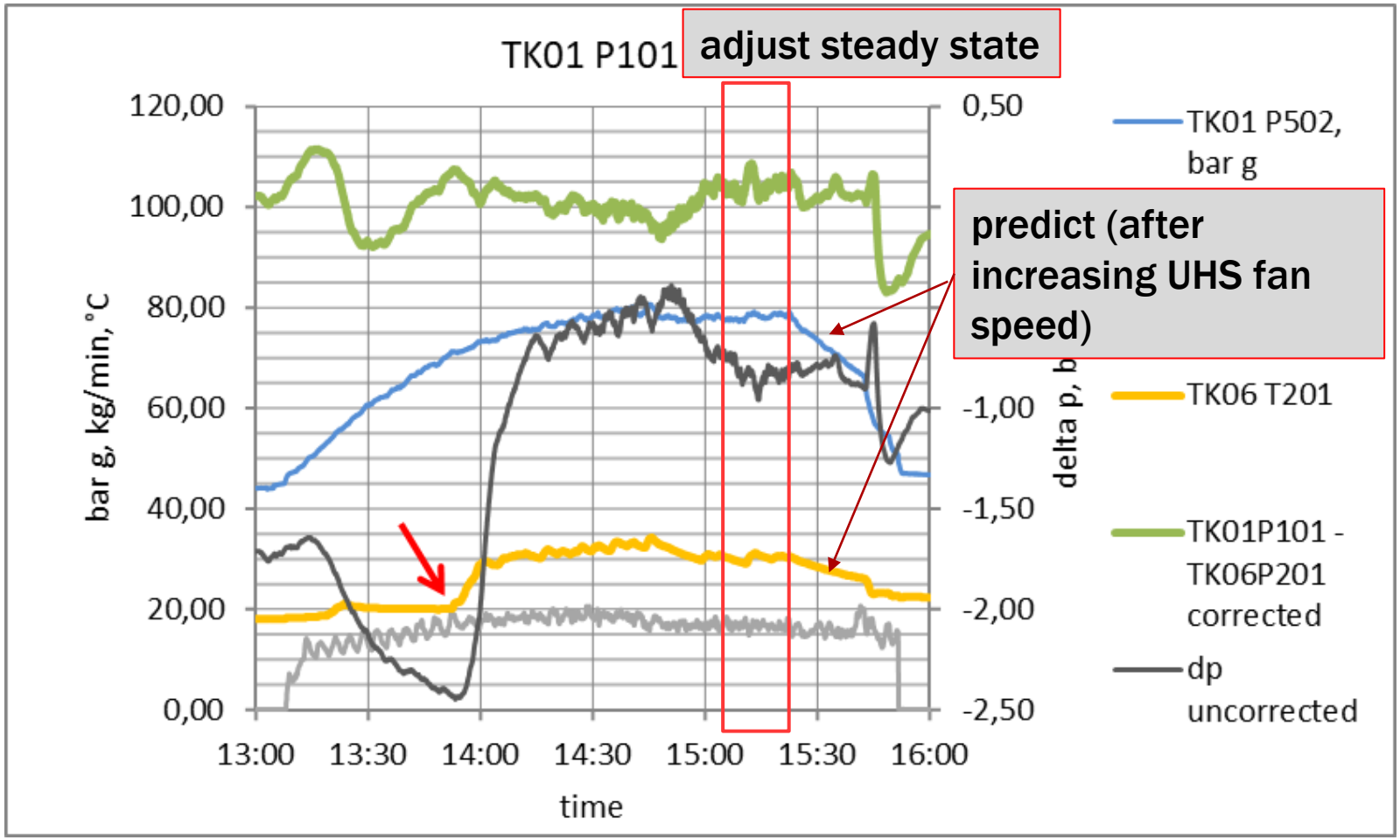

SOME RESULTS OF BENCHMARK TEST (D1.2)

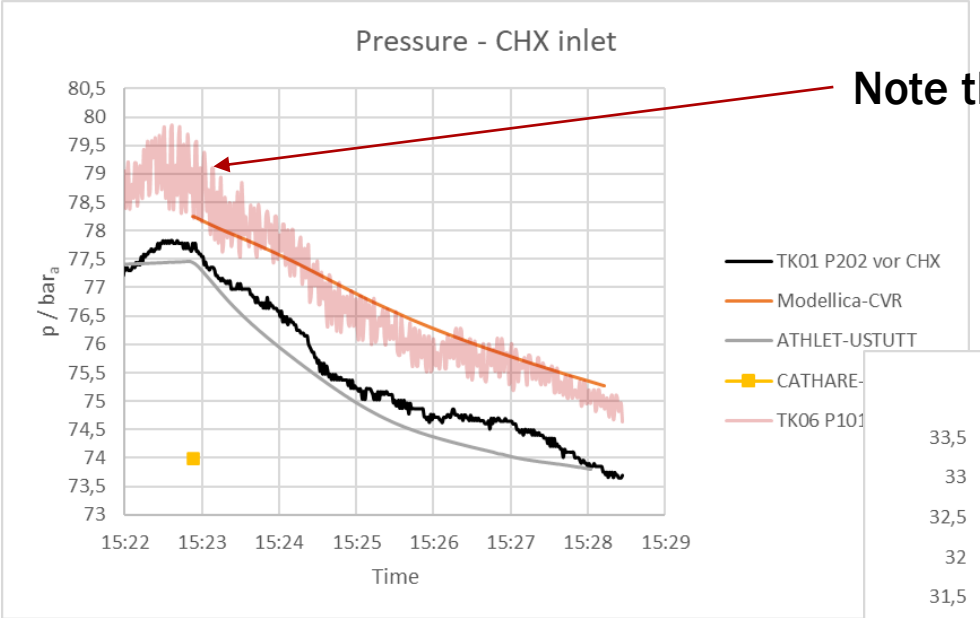

Note the oscillations to PV1

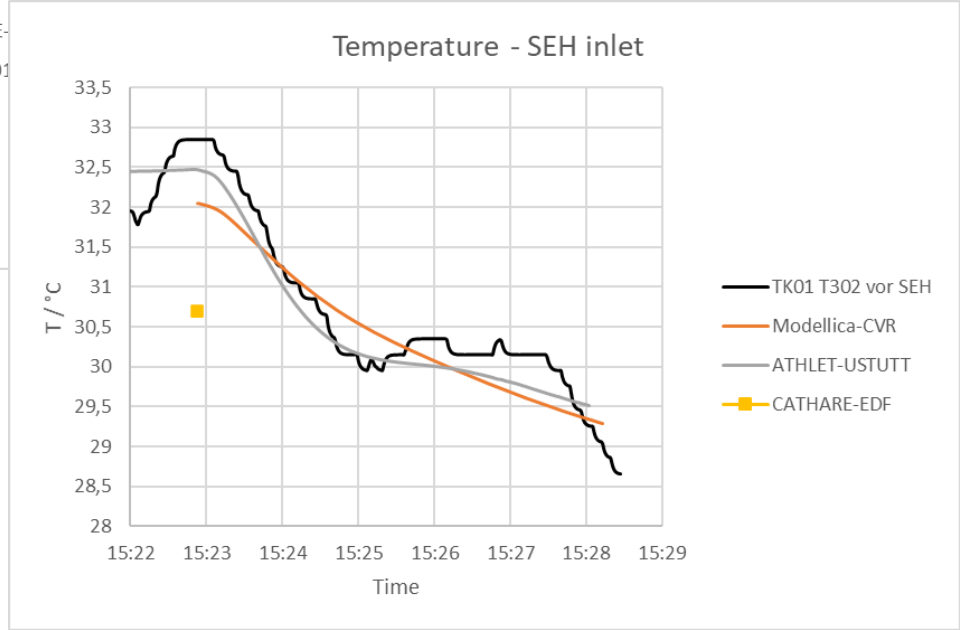

OSCILLATIONS

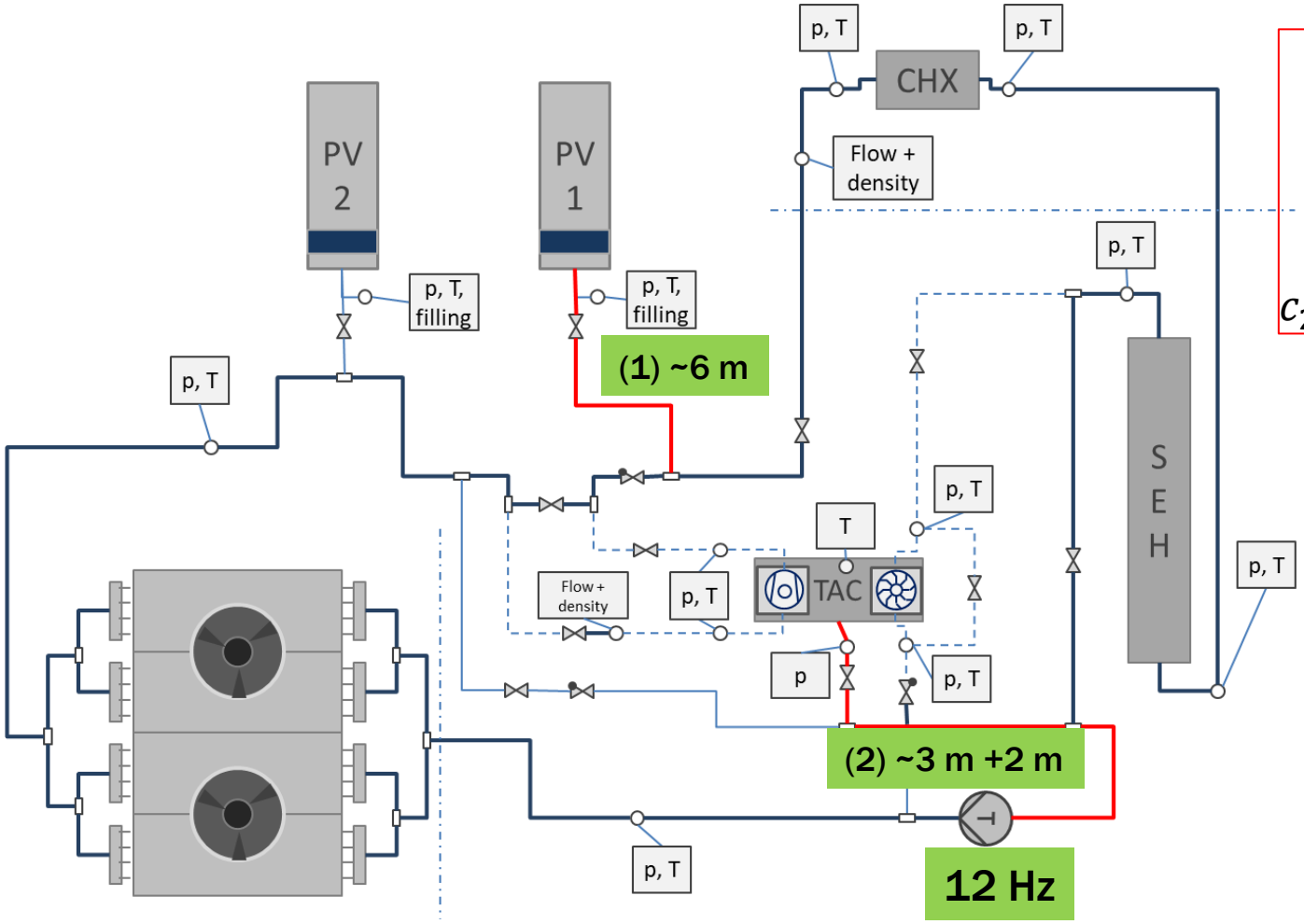

$$a = \lambda f$$

$$l_{res} = \frac{\lambda}{2}$$

$$c_1 \sim 144\ \frac{m}{s}$$

$$c_2 \sim 72 - 120\ m/s$$

Pressure propagation in 2-phase mix?

THANK YOU

This project has received funding from the Euratom research and training programme 2014-2018 under grant agreement No 847606. This text reflects only the author's views and the Commission is not liable for any use that may be made of the information contained therein.

SIMULATION: SCO_2 LOOP WITH SCALED-UP COMPONENTS

WP 2

Michael Buck (University of Stuttgart)

CONTENT

THERMODYNAMIC LAYOUT

SCALED UP COMPONENT MODELS

CONTROL STRATEGY

DIFFERENT PWR TYPES

REFERENCE CASE

COUPLED SIMULATIONS

WP 2:
Simulation: sCO_2 loop with scaled-up components

THERMODYNAMIC LAYOUT

- General idea: develop *unified* SCO_2 system of moderate size and use *multiple* units per reactor
- Heat removal capacity per unit as *compromise* between *economy* (larger) and *scalability* (smaller)

  ⇨ unit size of 10 MW_{th}

- Number of required systems to be determined for each plant type:

⇨ preserve sufficient amount of coolant on secondary side

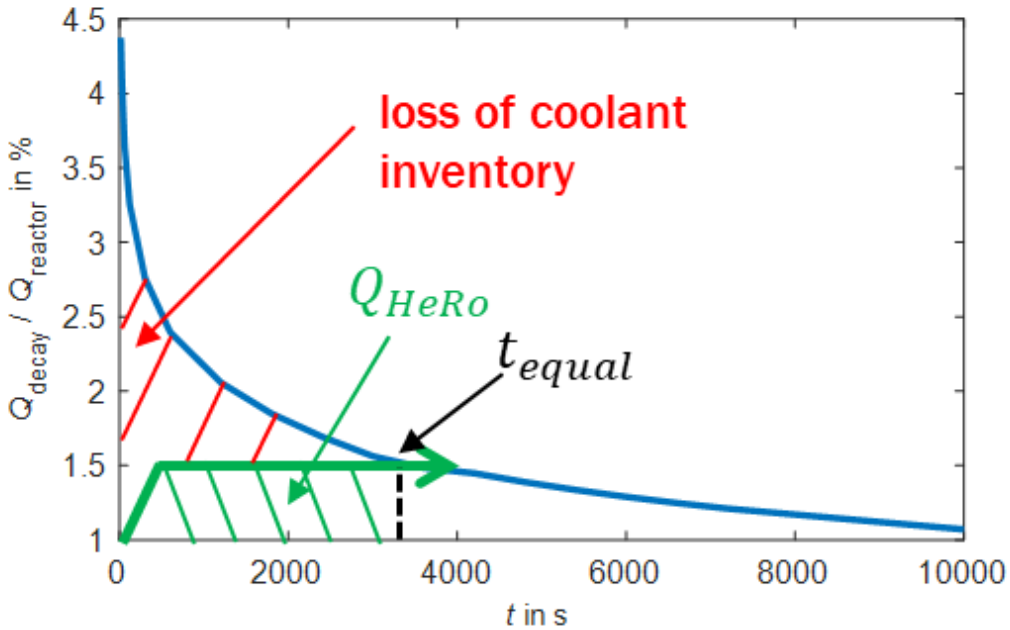

THERMODYNAMIC LAYOUT – DESIGN PARAMETERS

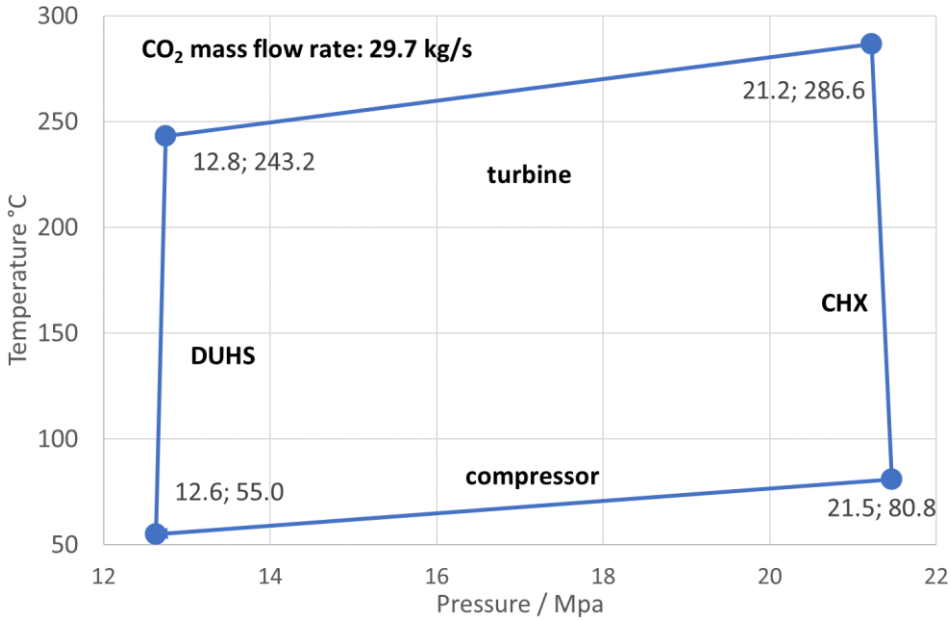

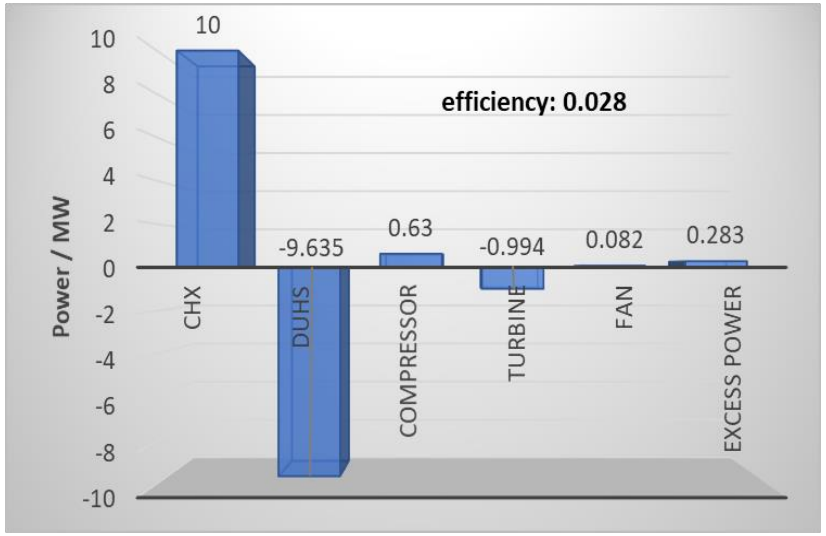

- Design parameters chosen to guarantee nominal heat removal (10 MW_{th}) at conservatively high ambient temperature (45°C)
- Major criterion: *heat removal*; efficiency of minor importance
- Takes into account technical design constraints identified in cooperation with WP4 (e.g. maximum temperature difference in HXs)

SIMULATIONS WITH SCALED-UP COMPONENT MODELS

- Development of *scaled-up component models* based on
  - thermodynamic design parameters for NPP scale
  - validation results from WP1
  - design data and performance maps from WP4
- *Stand-alone simulations* to explore and evaluate
  - operational limits
  - control strategies
  - operation readiness state
  - start-up strategies
  - …

Dymola model with scaled-up components

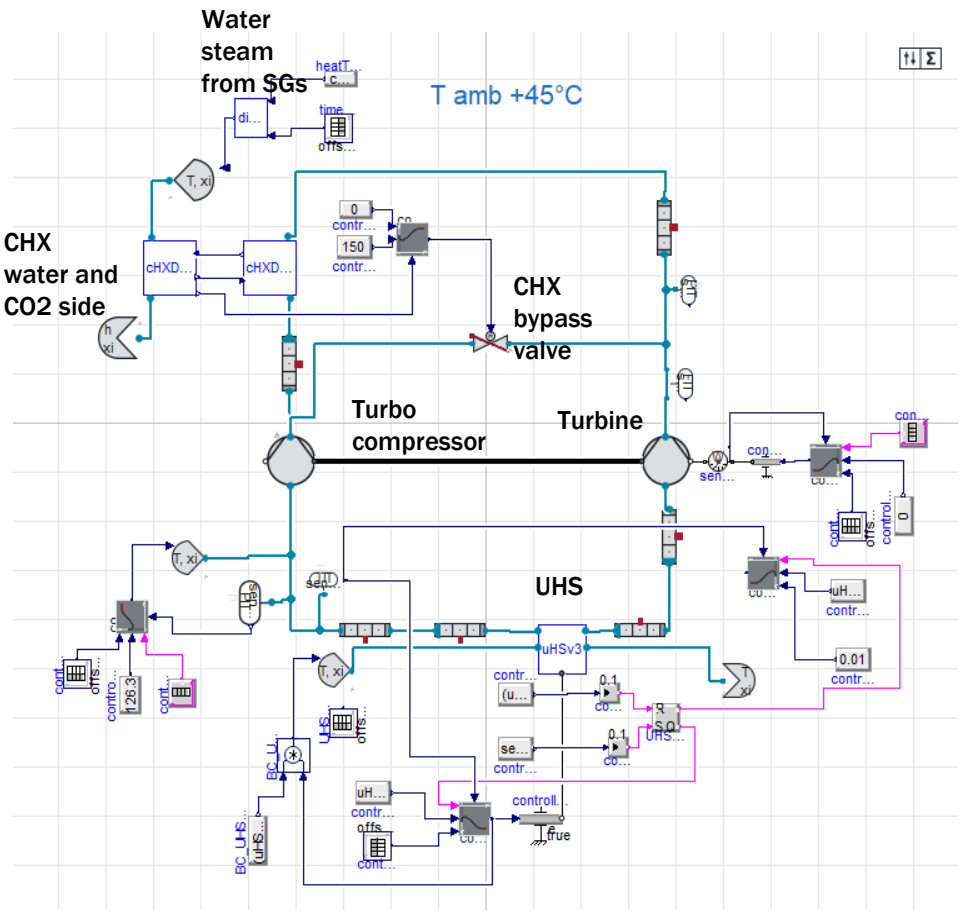

OPERATION RANGE AND ADAPTED CONTROL STRATEGY

- Compressor inlet temperature T_1 kept constant via control of fan speed of UHS
  - ⇨ method can be used practically over the whole range of ambient temperatures
- Varying heat fluxes from the steam-side can be handled by controlling the shaft speed of the turbomachinery

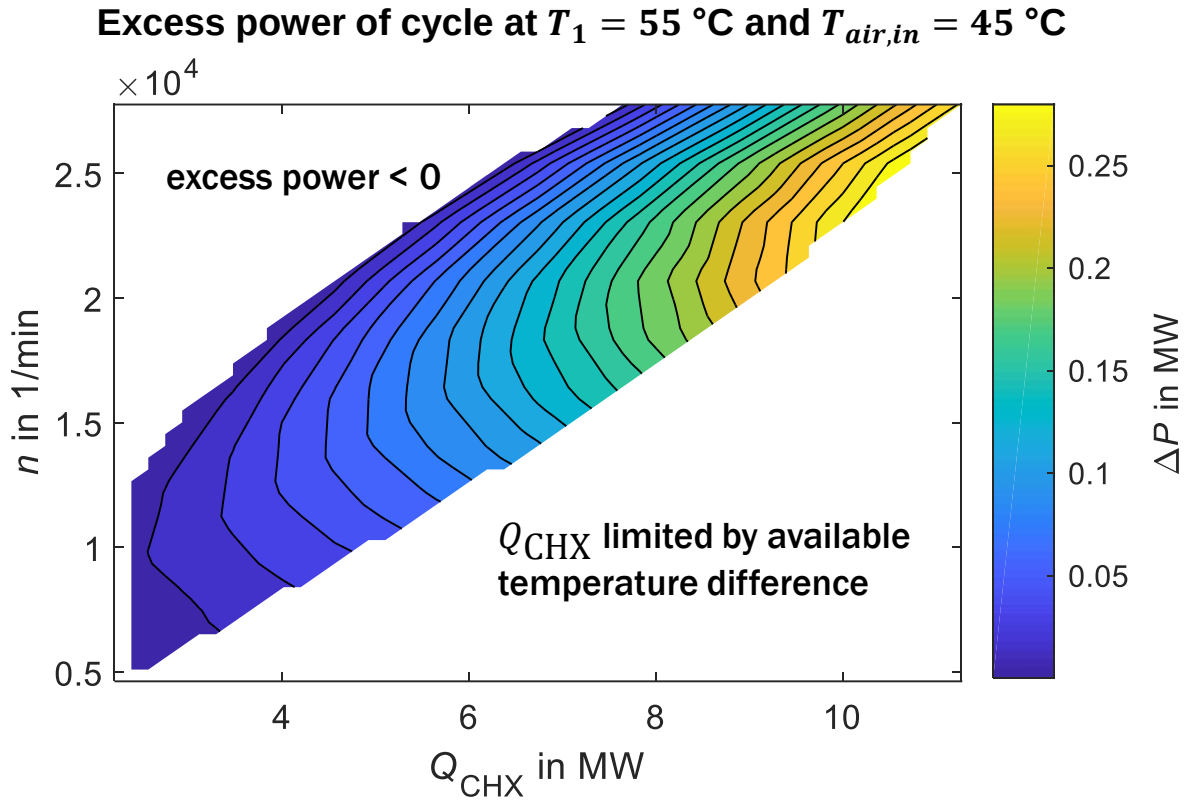

⇨ Shaft speed should decrease with decreasing thermal power input Q_{CHX}

⇨ Control shaft speed to keep turbine inlet temperature constant

Successfully balances heat removal by CO_2 systems and decay heat

SIMULATION IN DIFFERENT PWR TYPES

- Analyses of SBO accident scenarios for **EPR** with CATHARE (EDF), **VVER-1000** with ATHLET/MODELLICA (CVR/UJV) and **Konvoi** with ATHLET (USTUTT)

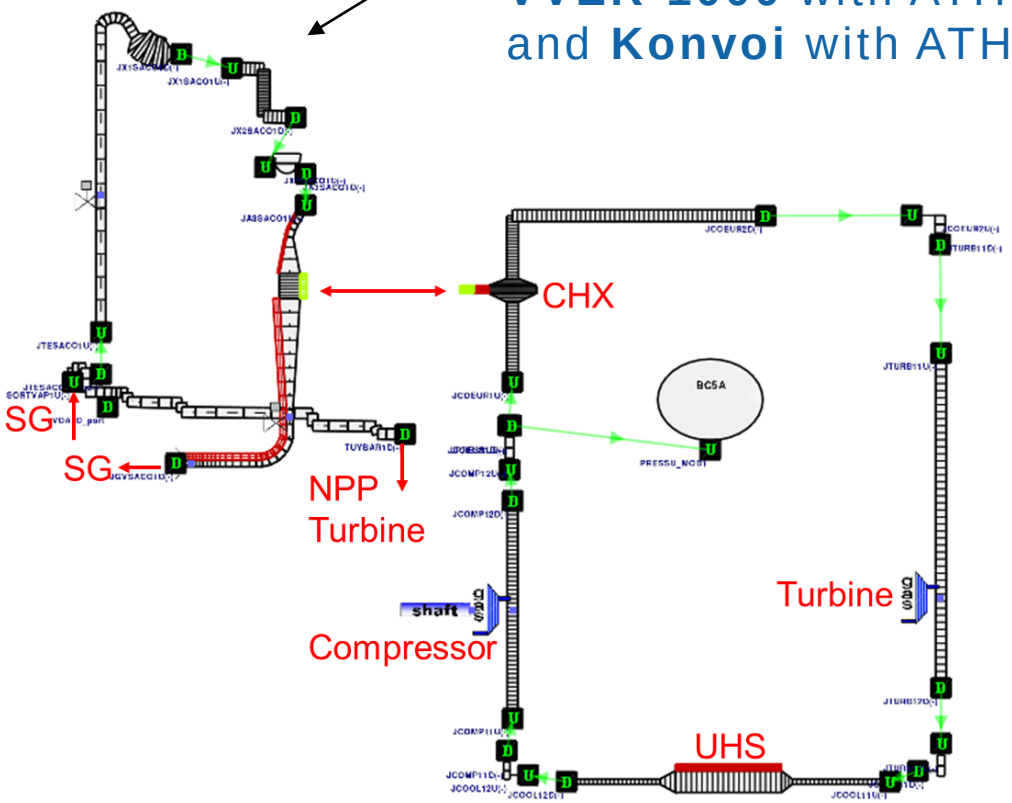

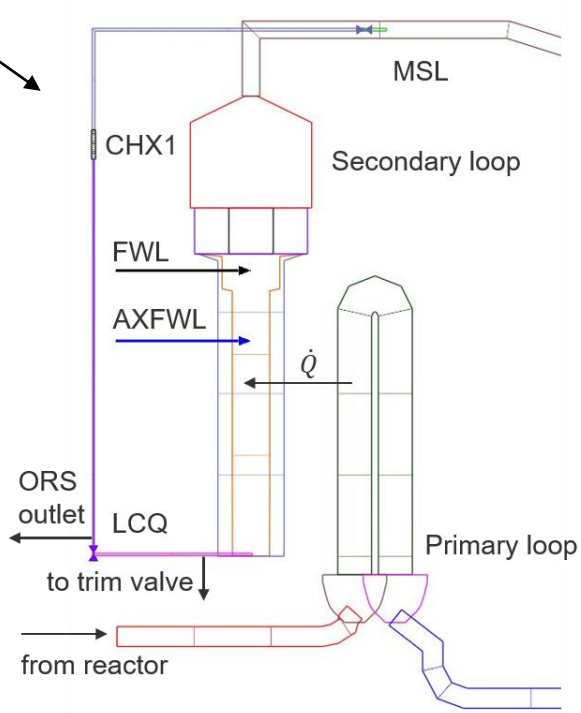

SIMULATION IN DIFFERENT PWR TYPES

- sCO_2 loop in VVER 1000

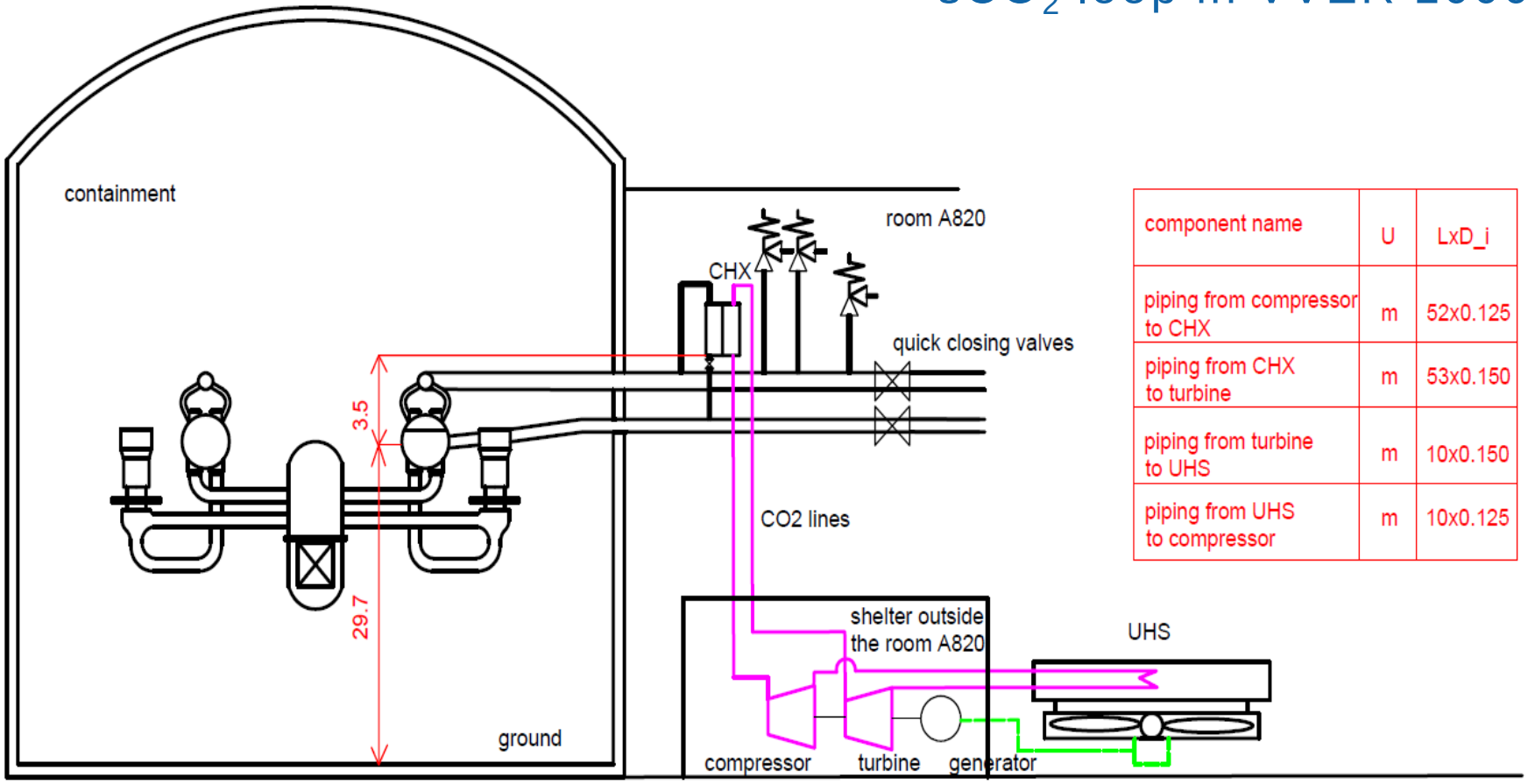

component name	U	LxD_i
piping from compressor to CHX	m	52x0.125
piping from CHX to turbine	m	53x0.150
piping from turbine to UHS	m	10x0.150
piping from UHS to compressor	m	10x0.125

REFERENCE CASE: SBO WITHOUT SCO_2-SYSTEM

1. Secondary system pressure and SG water level

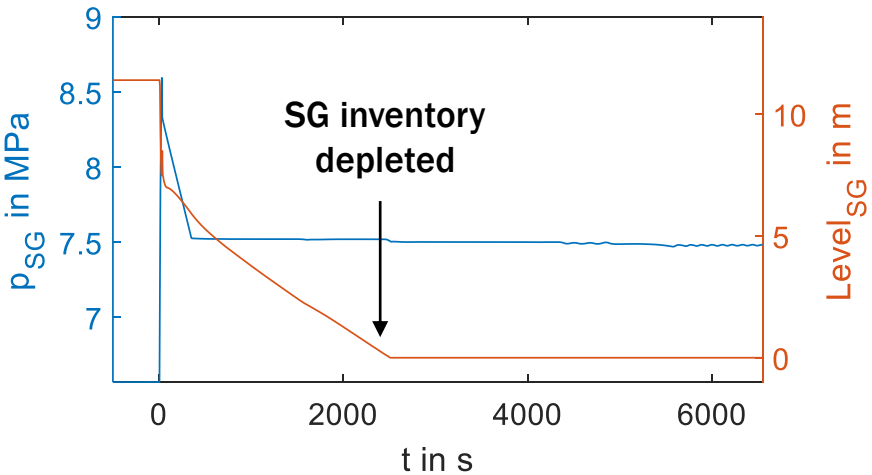

2.Primary system pressure

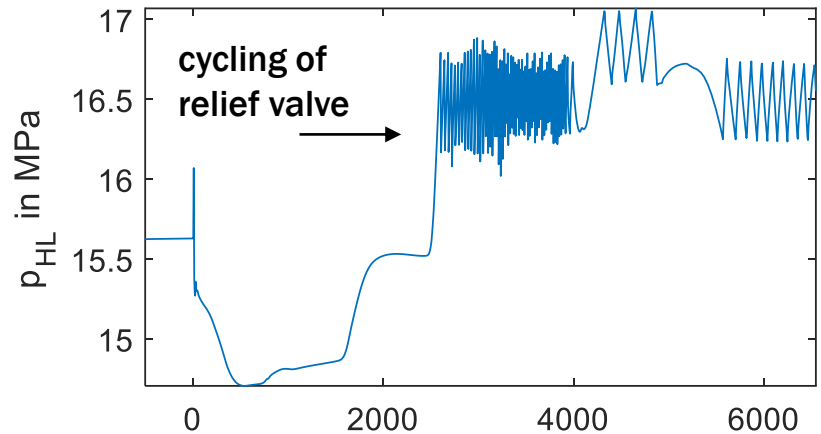

1. Partial cooldown of SGs to 75 bar preserves primary inventory up to ~2500 s
2. Subsequent cyclic opening of pressurizer relief valves removes heat from primary system
3. Steep rise of hot leg nozzle temperature signals core uncovering after ~5200 s
   ⇨transition to core melting

3. Temperatures at RPV hot and cold leg nozzles

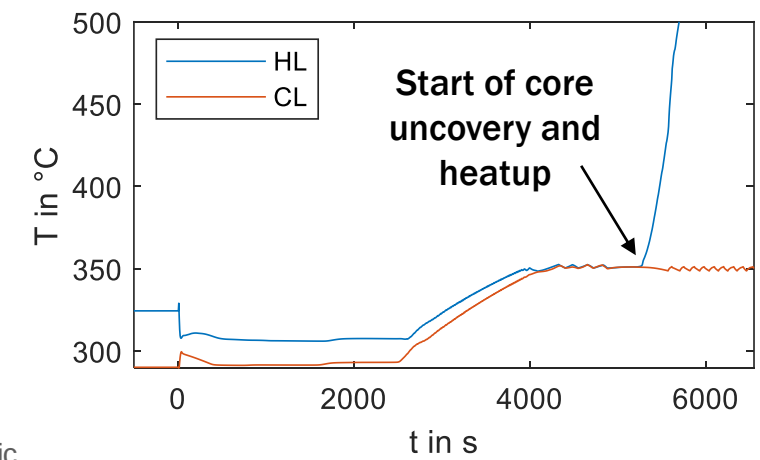

COUPLED SIMULATIONS: SBO WITH SCO_2-SYSTEM

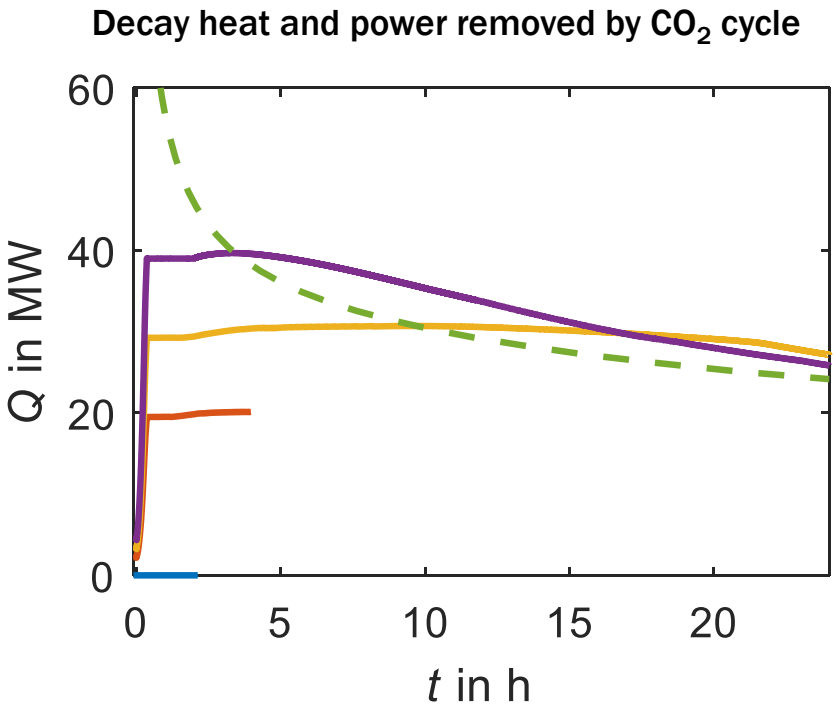

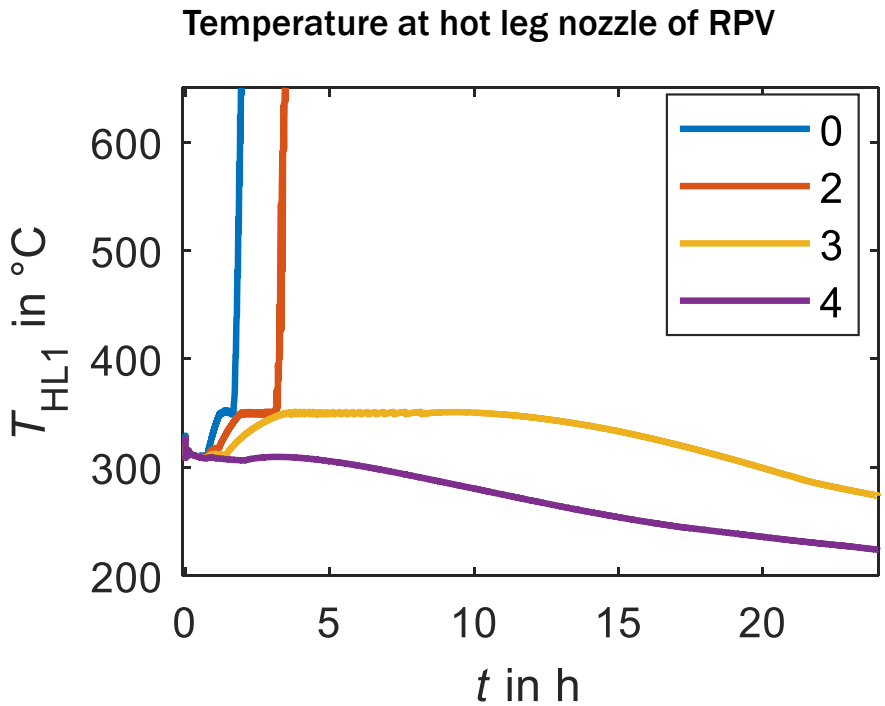

Results of ATHLET simulations of SBO sequence in Konvoi with different numbers of sCO_2 systems (all active, constant speed)

- 0: reference case; 2, 3, 4: cases with 2, 3, 4 sCO_2 systems
- 2 systems insufficient, 3 and 4 sufficient for at least 24 h

COUPLED SIMULATIONS: SBO WITH SCO_2-SYSTEM

Case with 4 sCO_2 systems

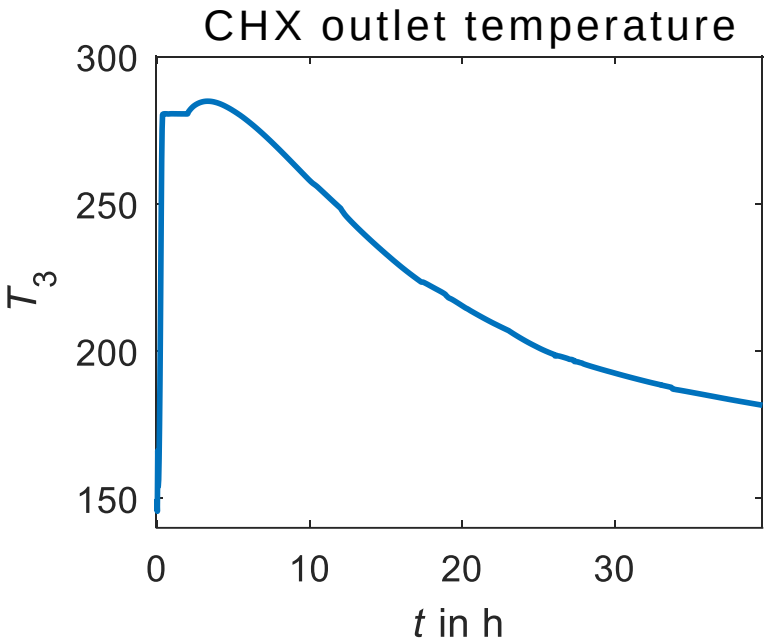

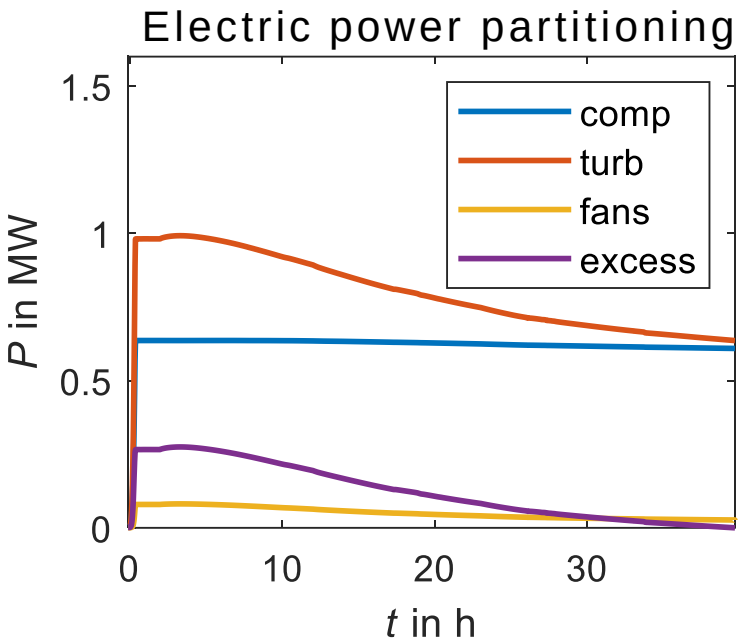

- heat extracted > decay heat ⇨ steam temperature decreases ⇨ excess power decreases to zero
  ⇨ systems fail after ~ 40h
- same and additional problems with 3 systems

⇨ ***Necessity for control strategy adapted to decreasing decay power!***

COUPLED SIMULATIONS: SBO WITH SCO_2-SYSTEM

PROPOSED DESIGN AND CONTROL STRATEGY FOR KONVOI

- 4 systems (one per SG)
- Control of turbo-machinery speed to keep turbine inlet temperature constant
- Subsequent shutdown of systems to adapt to declining decay heat

⇨ Power removed by sCO_2 systems closely follows decay heat

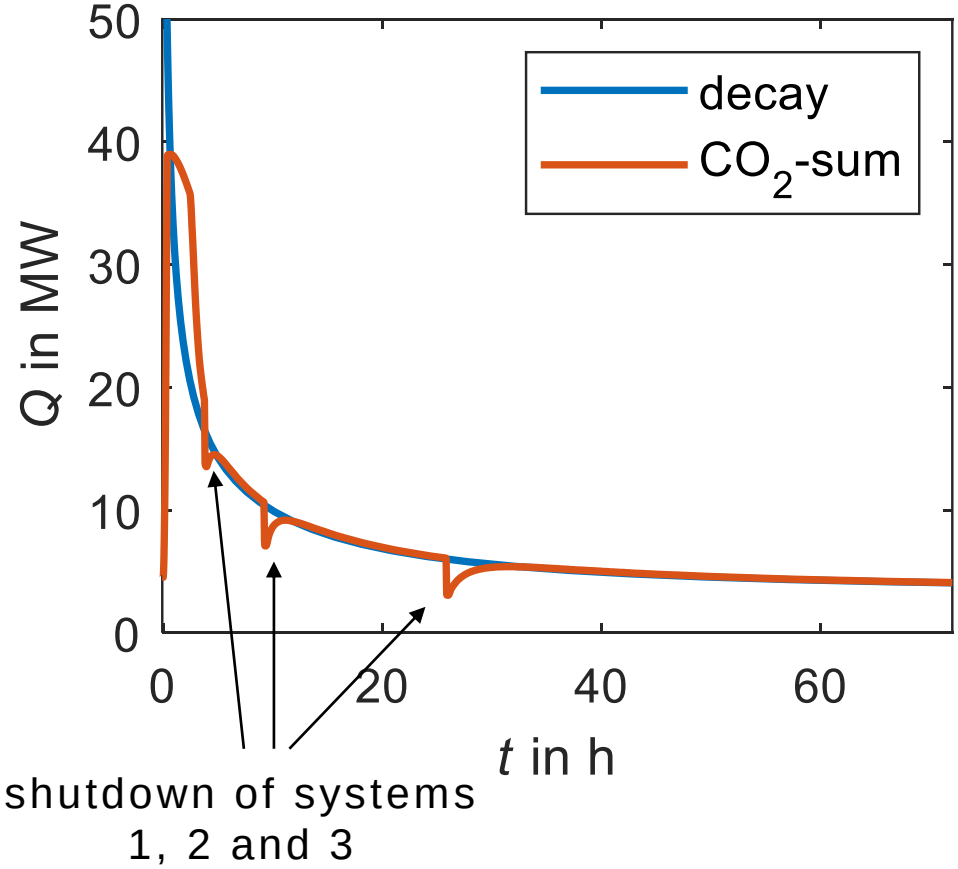

COUPLED SIMULATIONS: SBO WITH SCO_2-SYSTEM

PROPOSED DESIGN AND CONTROL STRATEGY FOR KONVOI

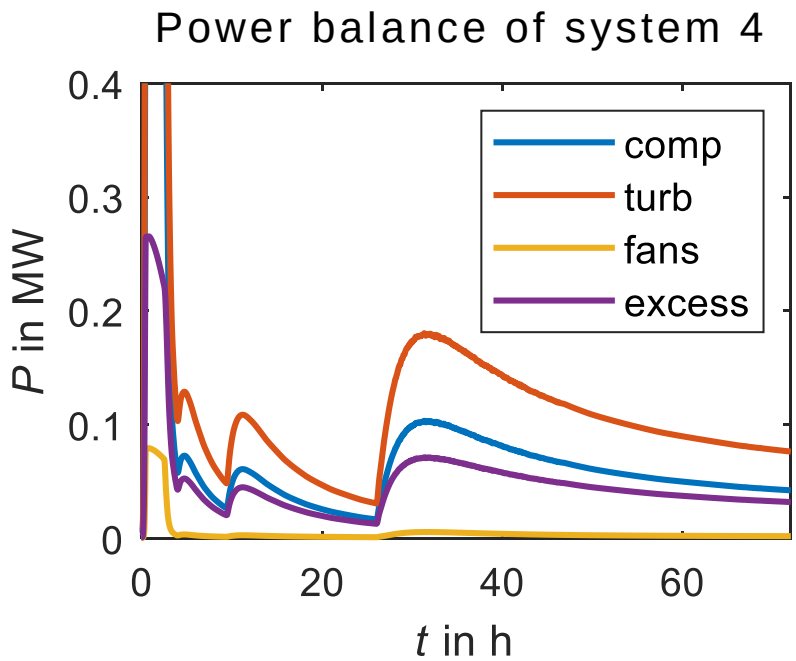

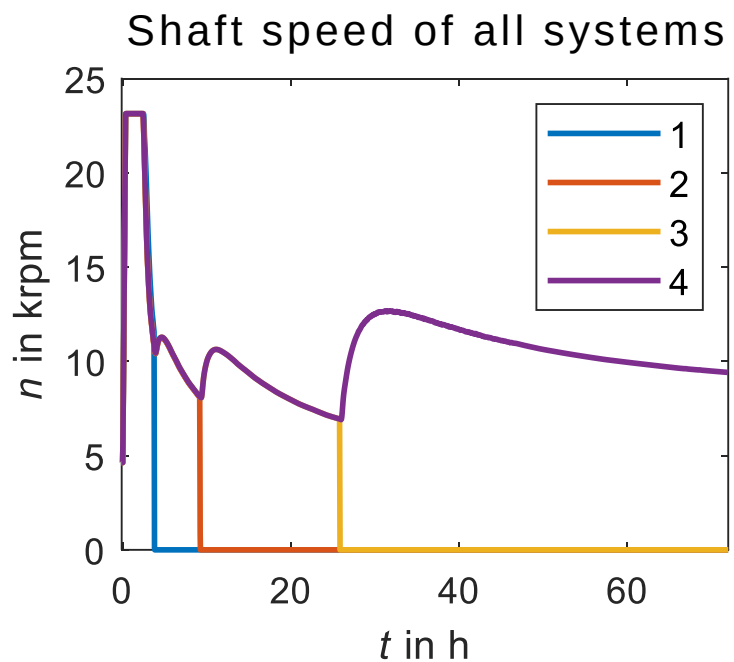

- Systems can run for more than 72 h
- Excess power always significantly > 0

COUPLED SIMULATIONS: SBO WITH SCO_2-SYSTEM

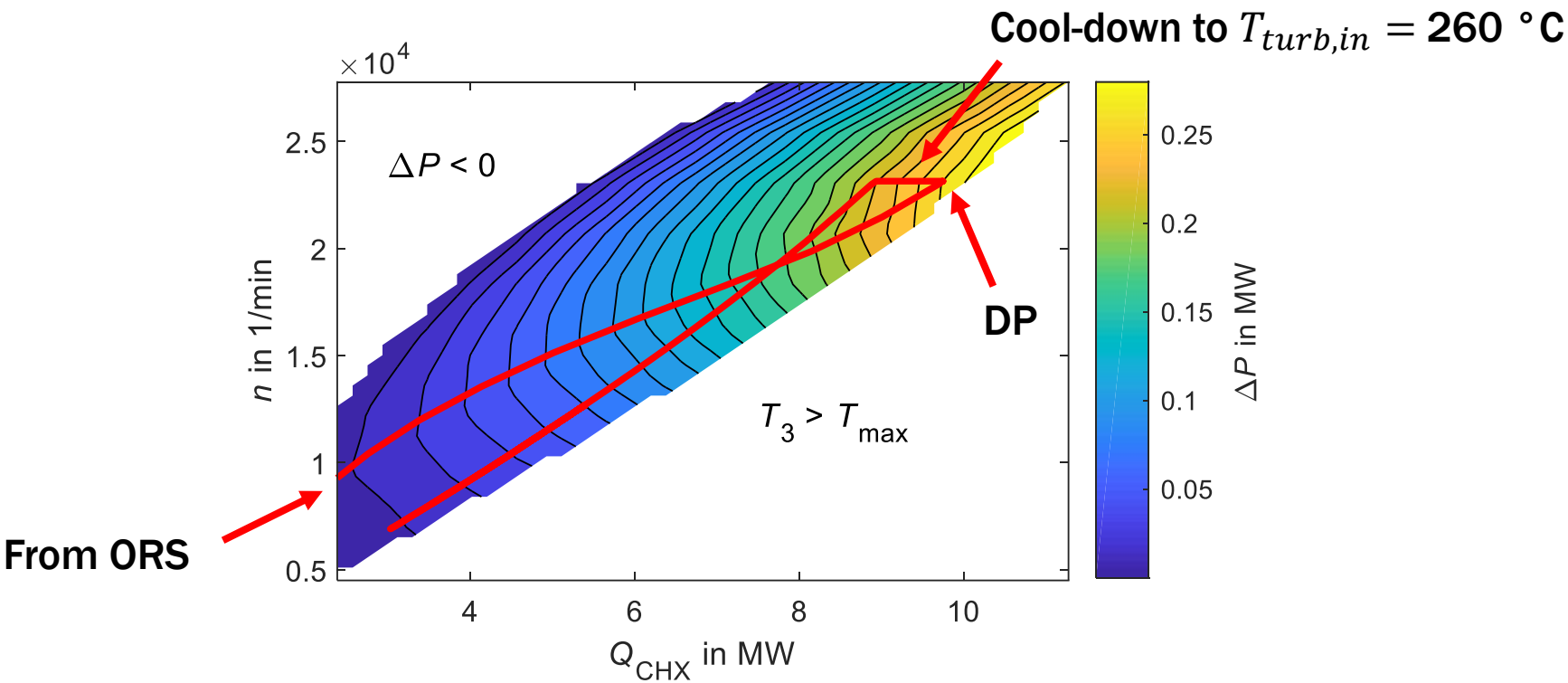

- Cycles can stay within operational limits for more than 72 h
- Working point of compressor mostly in region of high efficiency with sufficient margin to surge line (see WP4 presentation)

CONCLUSION

- Thermodynamic design of sCO_2 heat removal system
  - unified, modular (10 MW_{th}/unit), adaptable to different NPP types
  - respects constraints imposed by hardware components
- Scaled-up simulation models developed and integrated in 3 different simulation tools (CATHARE, ATHLET, DYMOLA)
- Performance of sCO_2 heat removal system analysed by simulations of SBO scenarios in 3 different NPP types (EPR,VVER, KONVOI)
  - without sCO_2 system, core melting would start within few hours
  - about one sCO_2 unit required per 1000 MW_{th} reactor power to remove decay heat in the first hours of the accident
  - sCO_2 fluid state can be successfully controlled to remain within operational range of TC system

CONCLUSION

- Power removed by sCO_2 system should be adapted to declining decay power to preserve sufficient excess electrical power
  - control of TC machinery speed and sequential shutdown of units is a feasible strategy (demonstrated for KONVOI)
  - can be adapted and applied to other PWR types
- **sCO_2 heat removal system can remove decay heat and extend the grace time by more than 72 h**
- Design will be further worked out and improved in WP 5

  (detailed layout of hardware, updated component models, startup methods, …)

CREDITS

This presentation was prepared based on the

Deliverable 2.2

Analysis of the performance of the sCO2-4-NPP system under accident scenarios based on scaled-up components data

which was the common work of

M. Hofer, M. Buck, T. Prusek, N. Sobecki, P. Vlcek, D. Kriz, T. Melichar, F. Hecker, A. Hacks, R. Meca, L. Vyskocil, V. Hakl, F. David, J. Frequelin

Valuable feedback was provided by the reviewers

A. Cagnac, J. Starflinger, A. Prošek

COMPONENT DEVELOPMENT : HEAT EXCHANGERS & TURBOMACHINERY

WP 4

Sarah Tioual-Demange

Radomir Filip

Haikun Ren

CONTENT

Heat Exchangers

Sarah Tioual-Demange
Fives Cryo

Radomir Filip
CVR

AIM OF THE TECHNOLOGY

- Aim : create an innovative technology to remove excess heat in case of nuclear accidents, based on supercritical CO_2 (sCO_2)
- Fives role was to develop 2 brazed Plate-Fin Heat Exchangers design to evacuate excess heat via advanced Brayton cycles using sCO_2 and ambient air
- Cooling system modules are highly compact, self-propellent, self-sustaining and self-launching

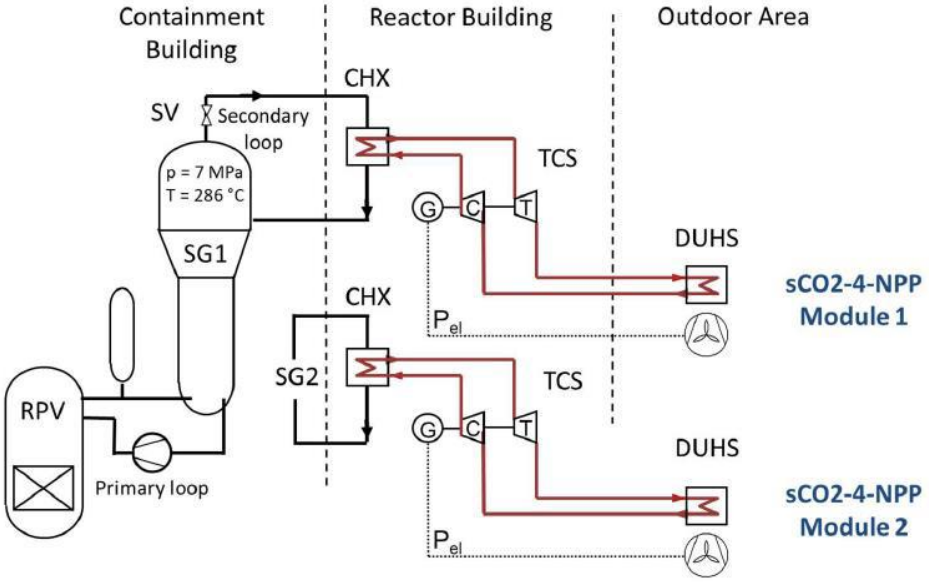

PLATE-FIN HEAT EXCHANGER OVERVIEW

- Plate-Fin Heat Exchanger (PFHE) consists of a block (core) of alternating layers closed by bars, containing corrugated fins, separated by parting sheets.

From layer …

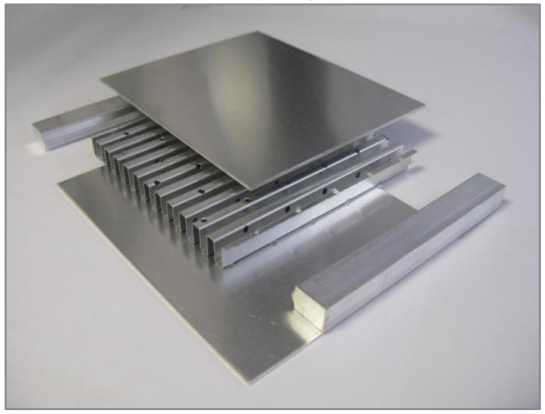

… to core

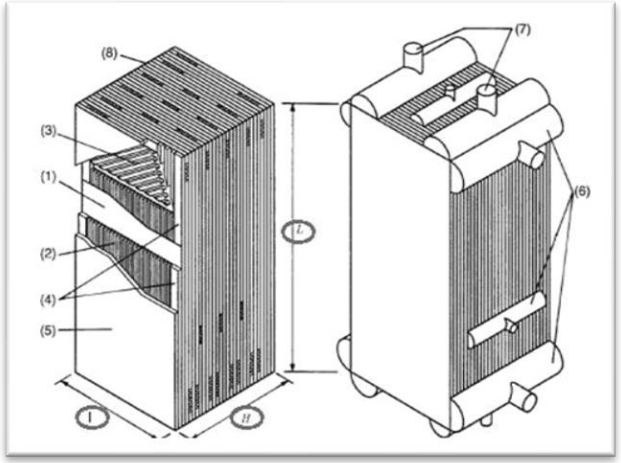

- After stacking, all layers are brazed to form one homogeneous core. Brazed joints are created during heating to ensure cohesion.

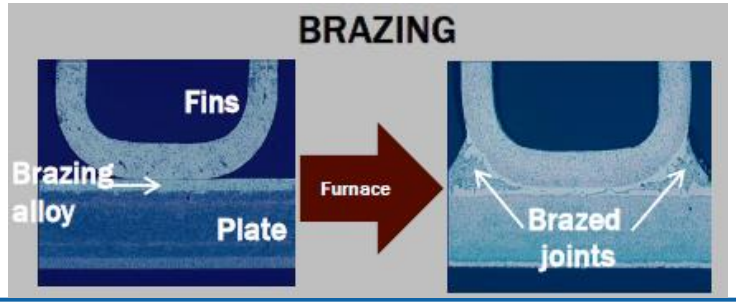

PLATE-FIN HEAT EXCHANGER OVERVIEW

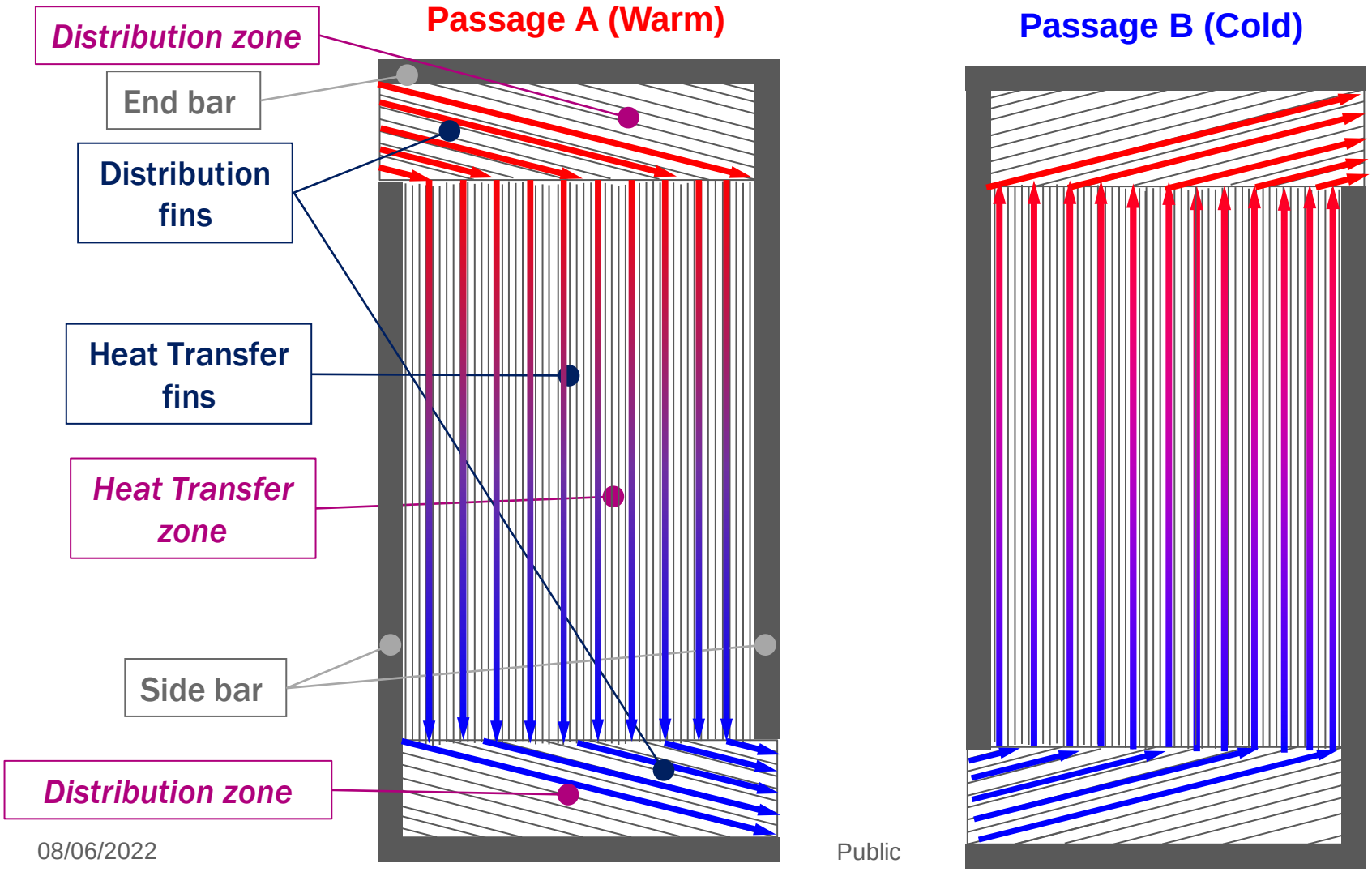

DIVERSE ULTIMATE HEAT SINK (DUHS) DESIGN

- DUHS will remove sCO_2 heat thanks to ambient air flow driven by fans
- 1 unit of 20 cores has a specified heat transferred of 10 MW
- Units can be installed outside building to limit penetration of reactor safety vessel
- sCO_2 in tighter passage, which increase fluid velocity, and multi-passes are chosen for thermal performance

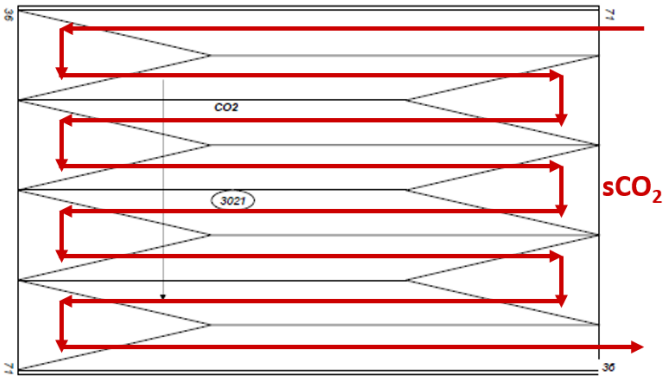

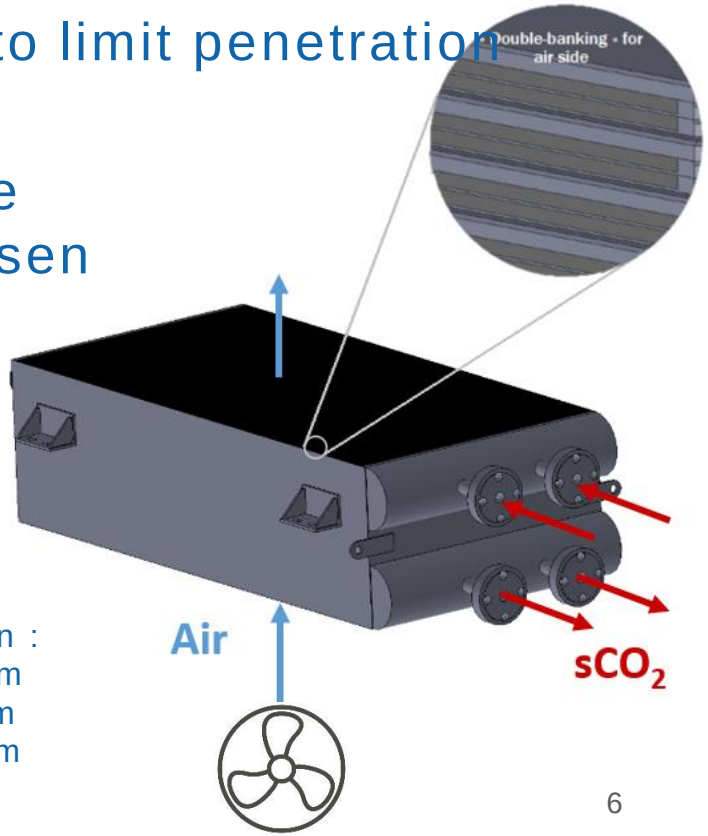

Core dimension :
Width: 2000 mm
Height: 987 mm
Length: 570 mm

DIVERSE ULTIMATE HEAT SINK (DUHS) OPTIMIZATION (SCO_2)

- Starting from the experimental results of the sCO_2-Flex project, Univ. Stuttgart investigates different fin designs for use in the sCO_2 side of the DUHS
- Results show that theoretical prediction methods for heat transfer and pressure drop agree well with the experimental results with sCO_2 within an error band of ±20%
- In a direct dimensionless comparison, the serrated fins show better heat transfer efficiency (Colburn j) and the straight fins lower pressure drop (Fanning f)

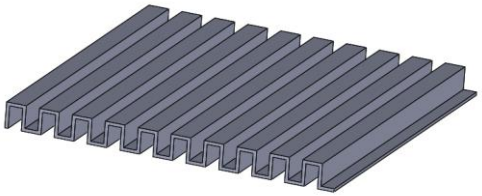

straight fins

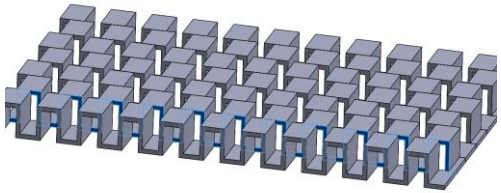

serrated fins

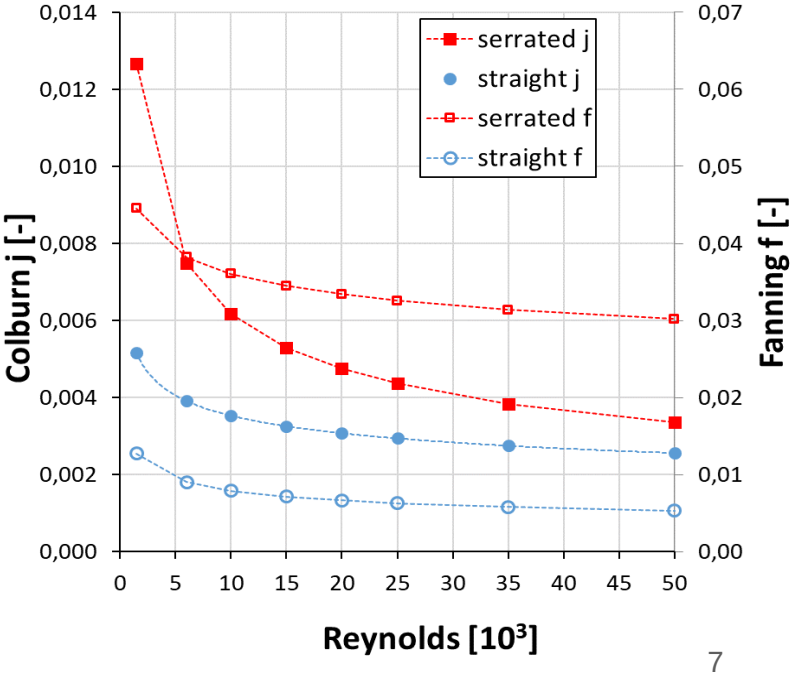

DIVERSE ULTIMATE HEAT SINK (DUHS) OPTIMIZATION (SCO_2)

- Univ. Stuttgart investigates the flow distribution from the manifold into the channels
- The simulations were carried out with a simplified model under isothermal conditions using the design poir
  - p= 12.7 MPa
  - T_{in}= 243 °C
  - m= 29.74 kg/s
- The flow velocities at the channels close to the inlet pipes are higher, which results in a higher mass flow

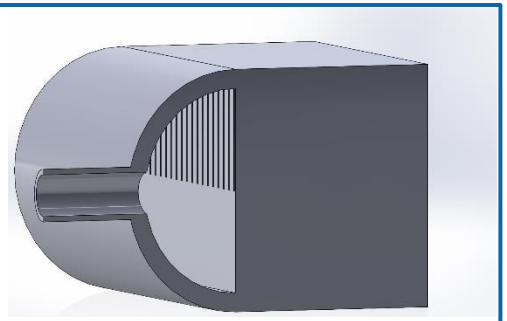

innitial manifold design

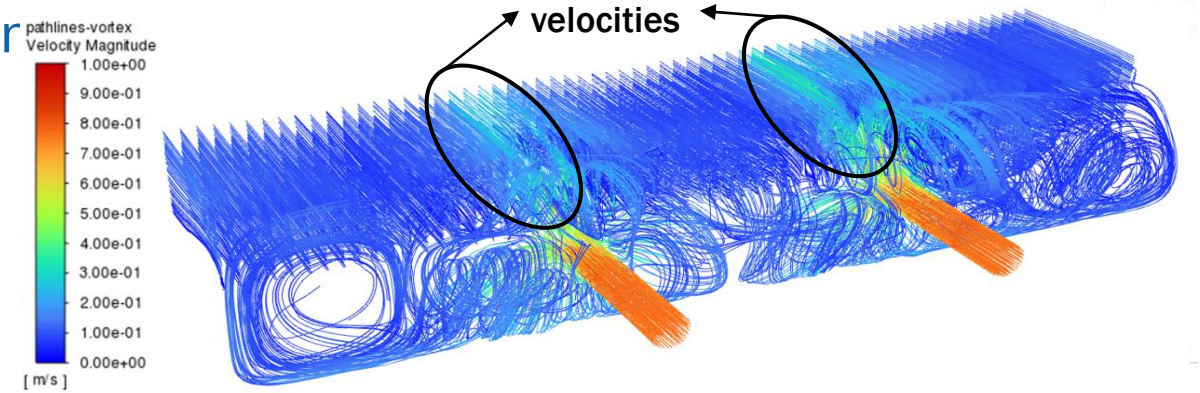

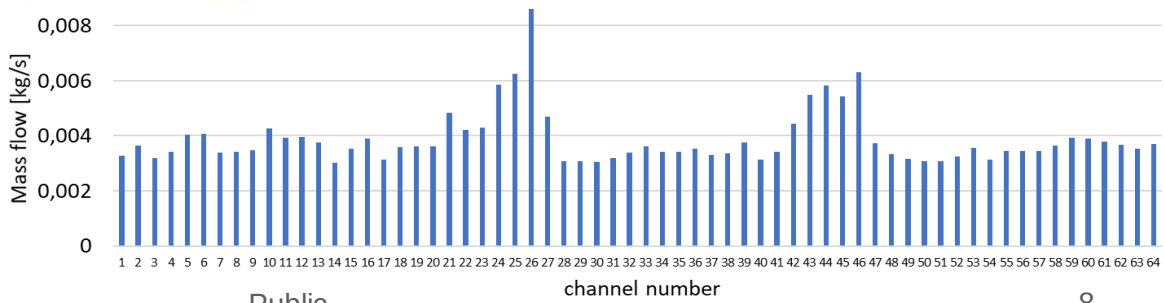

COMPACT HEAT EXCHANGER CHX DESIGN

- In the CHX, steam produced inside the steam generator will condense due to sCO_2 flow
- Specified heat transferred of 10MW
- This is a patented technology that allows heat exchange in a highly compact volume

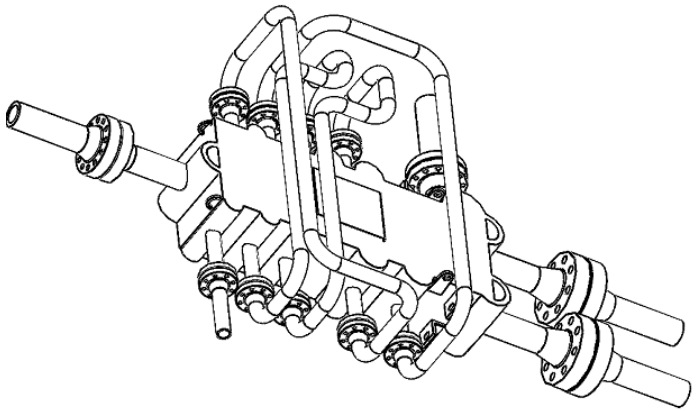

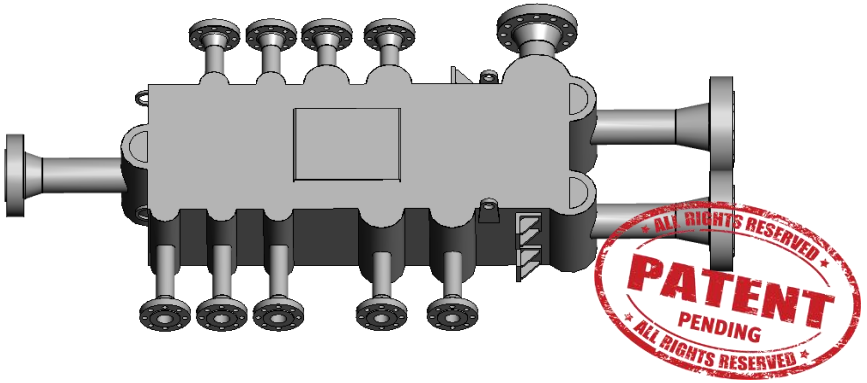

Core dimensions :
Width: 700 mm
Height: 512 mm
Length: 2000 mm

HX PERFORMANCES TESTED ON REDUCED SIZE MOCK-UPS

Brazed Compact Plates and Fins Heat exchangers components designed according to the cycle's parameters and appropriate mock-ups manufactured to be tested in experimental loops

CHX

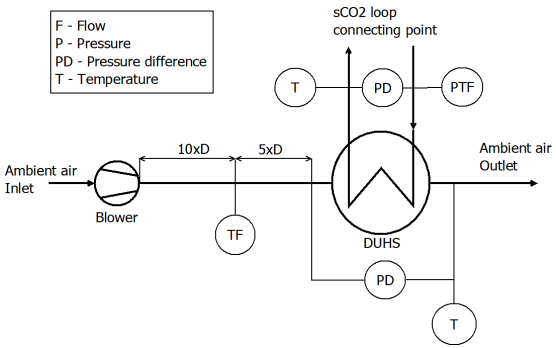

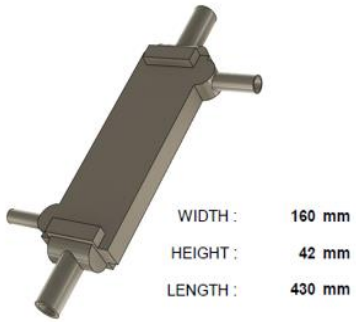

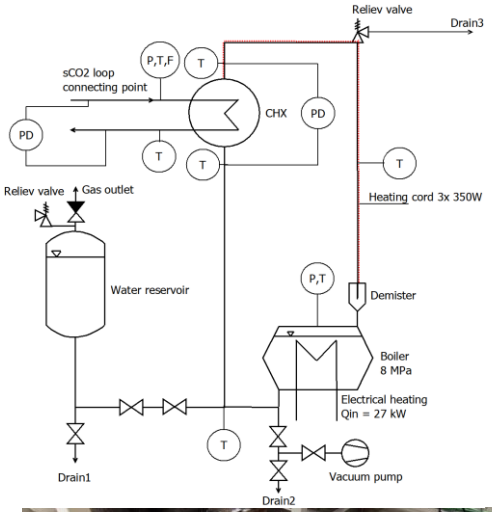

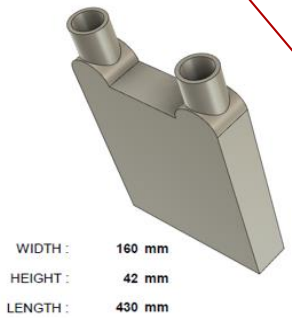

DUHS

OPTIMISATION OF THE DUHS EXPERIMENTAL CAMPAIGN

- Aim: Testing thermal-hydraulic performance of DUHS mock-up in CVR lab

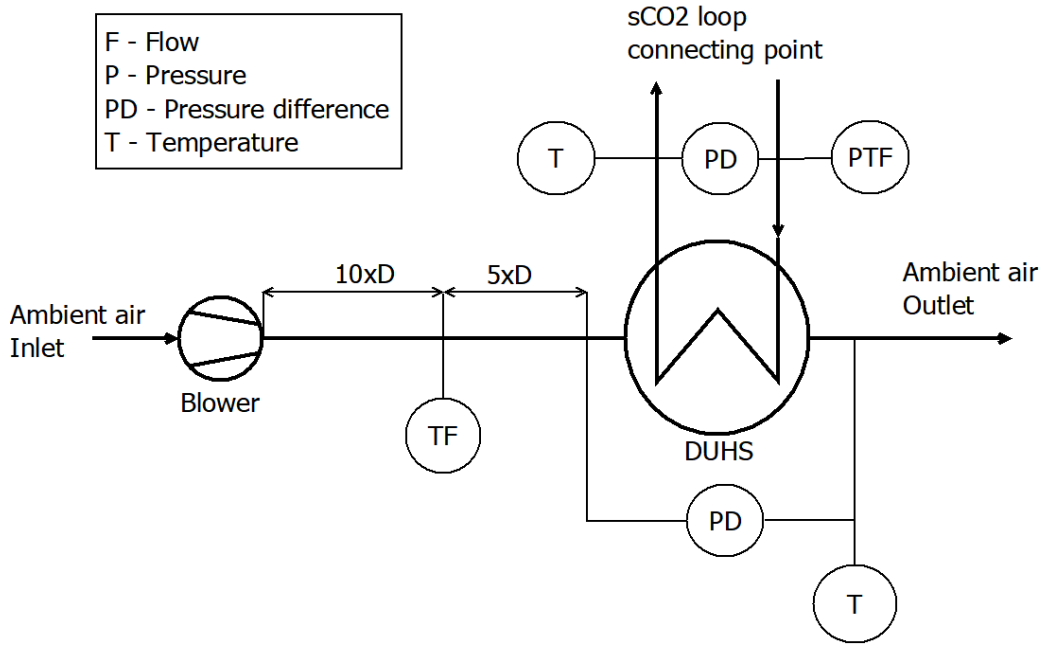

	Air side	CO2 side
Temperatures (°C)	<20; 123>	<83; 172>
Pressures (bar_a)	1	80
Total flowrate (g/s)	<20; 150>	<70; 140>
Re range	< 150; 3700>	<11000; 23000>

DUHS EXPERIMENTAL CAMPAIGN

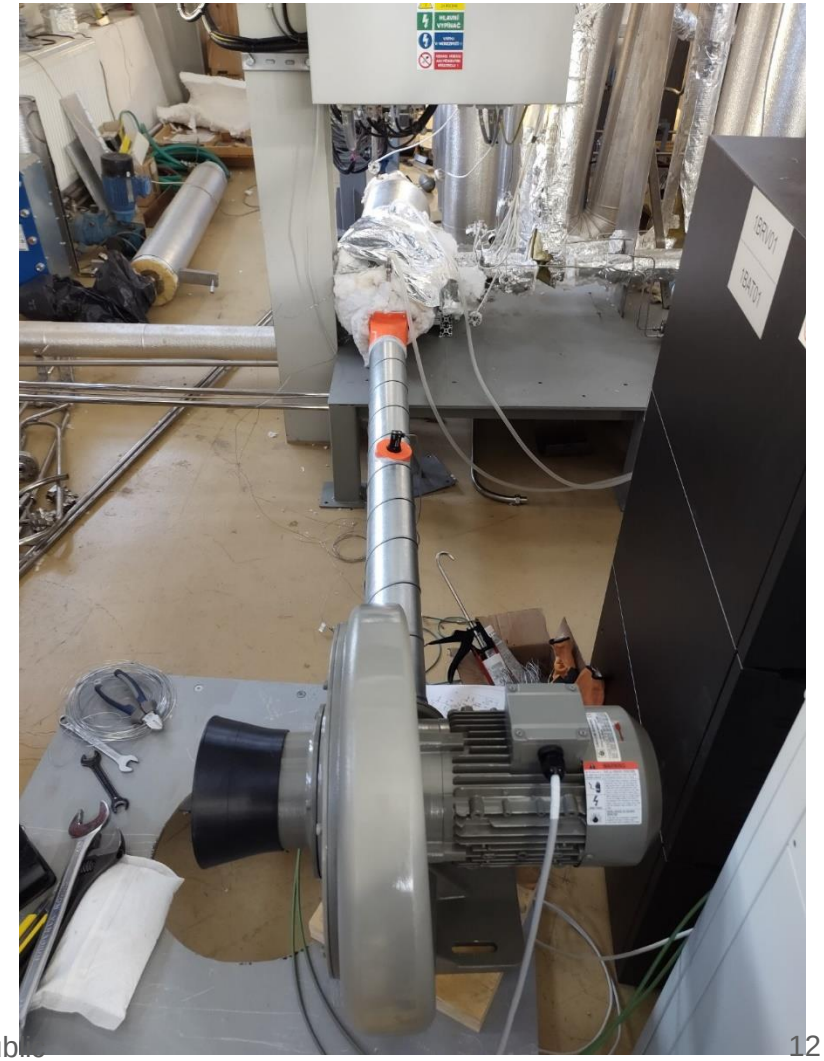

DUHS EXPERIMENTAL CAMPAIGN

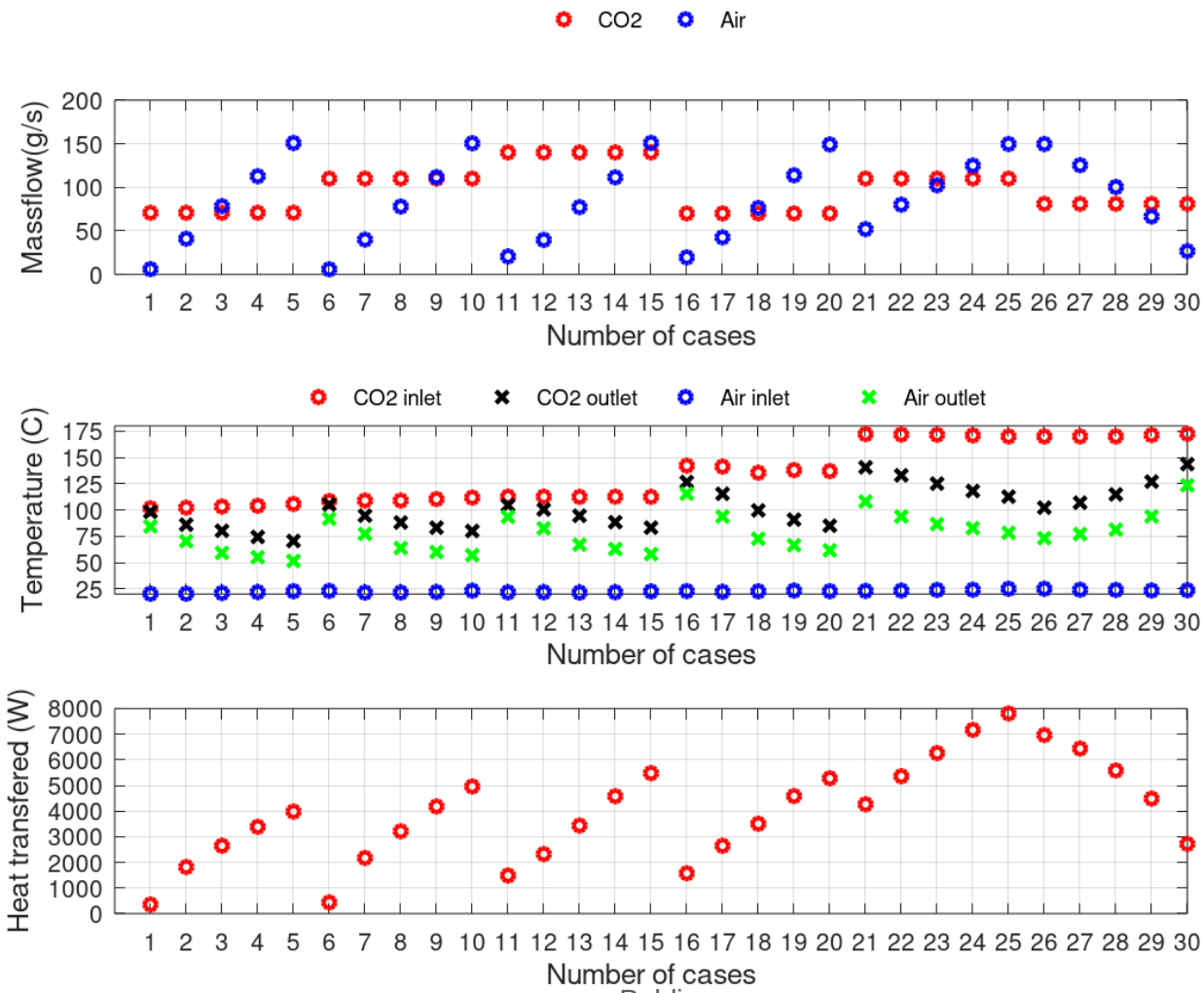

DUHS EXPERIMENTAL CAMPAIGN

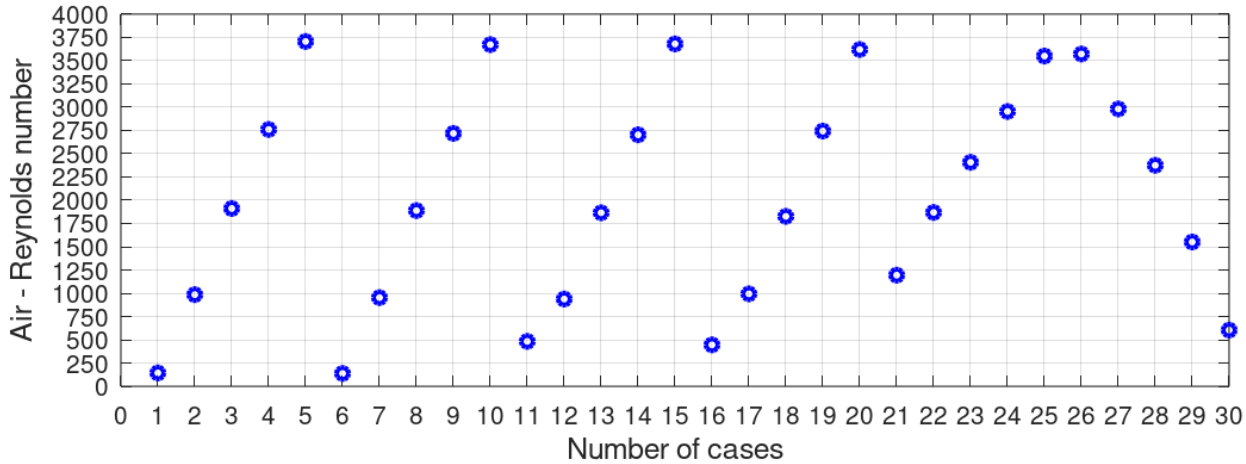

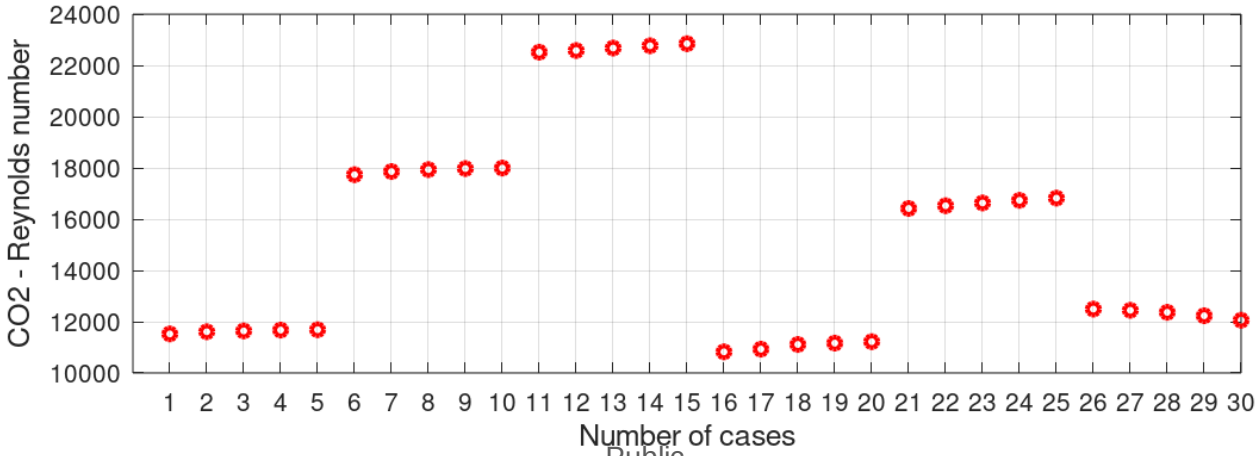

DUHS EXPERIMENTAL CAMPAIGN

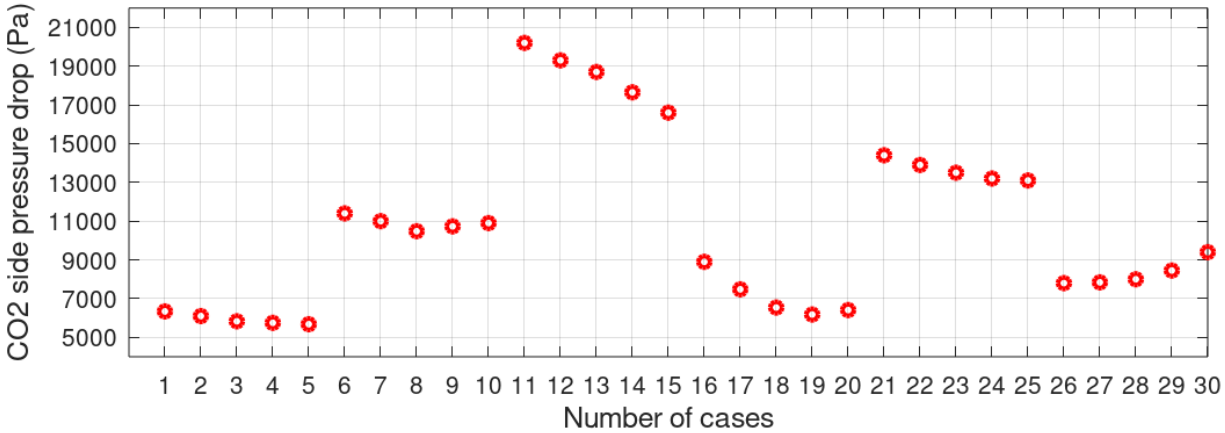

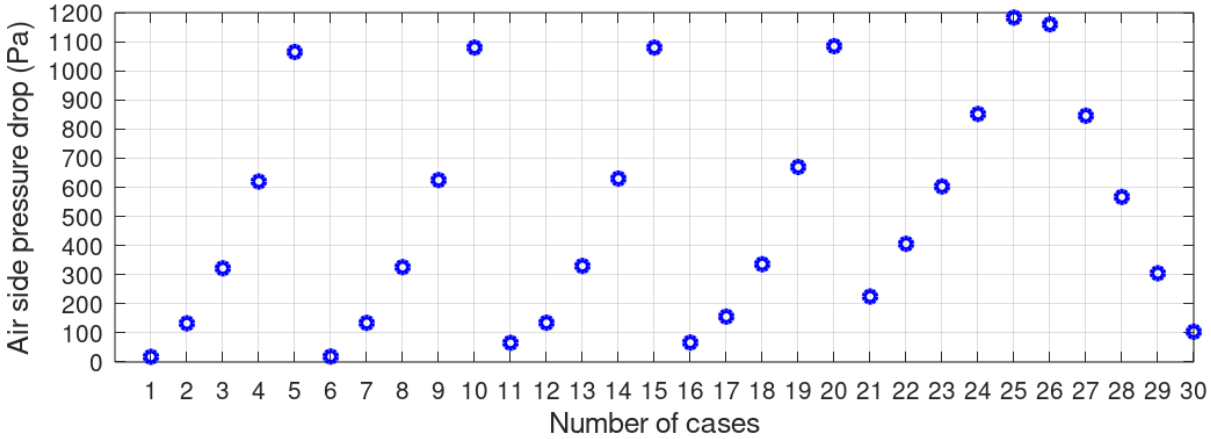

DUHS EXPERIMENTAL CAMPAIGN

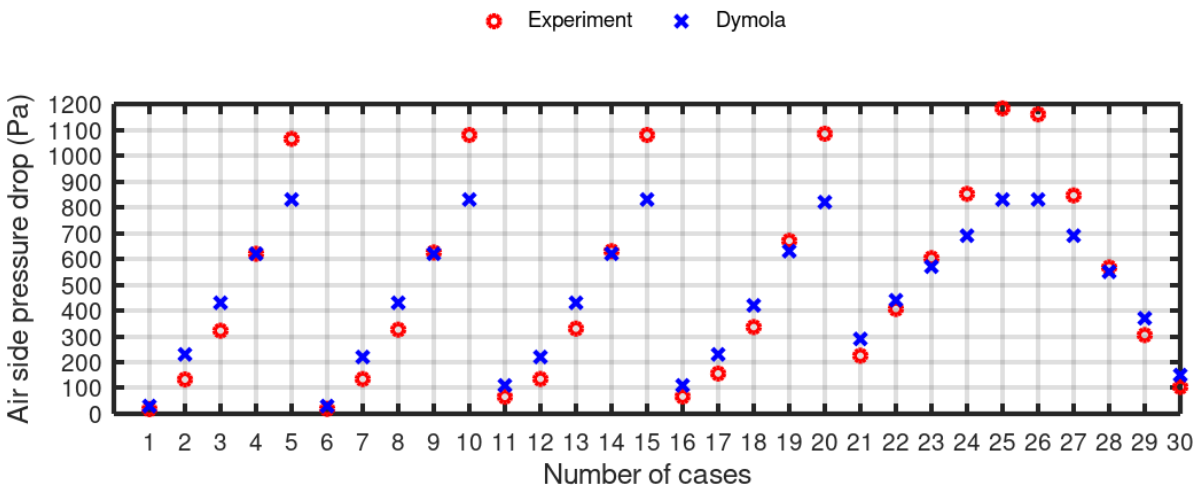

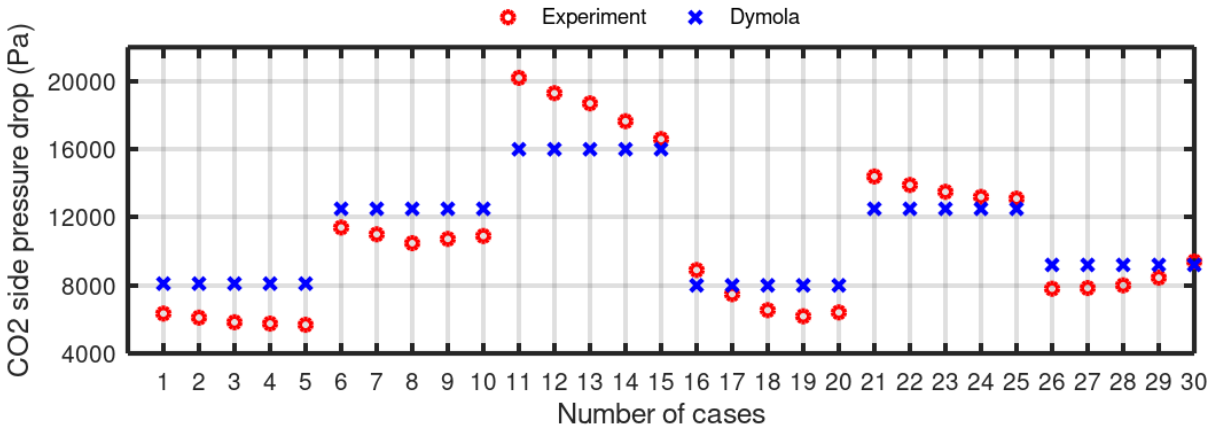

DUHS EXPERIMENTAL CAMPAIGN

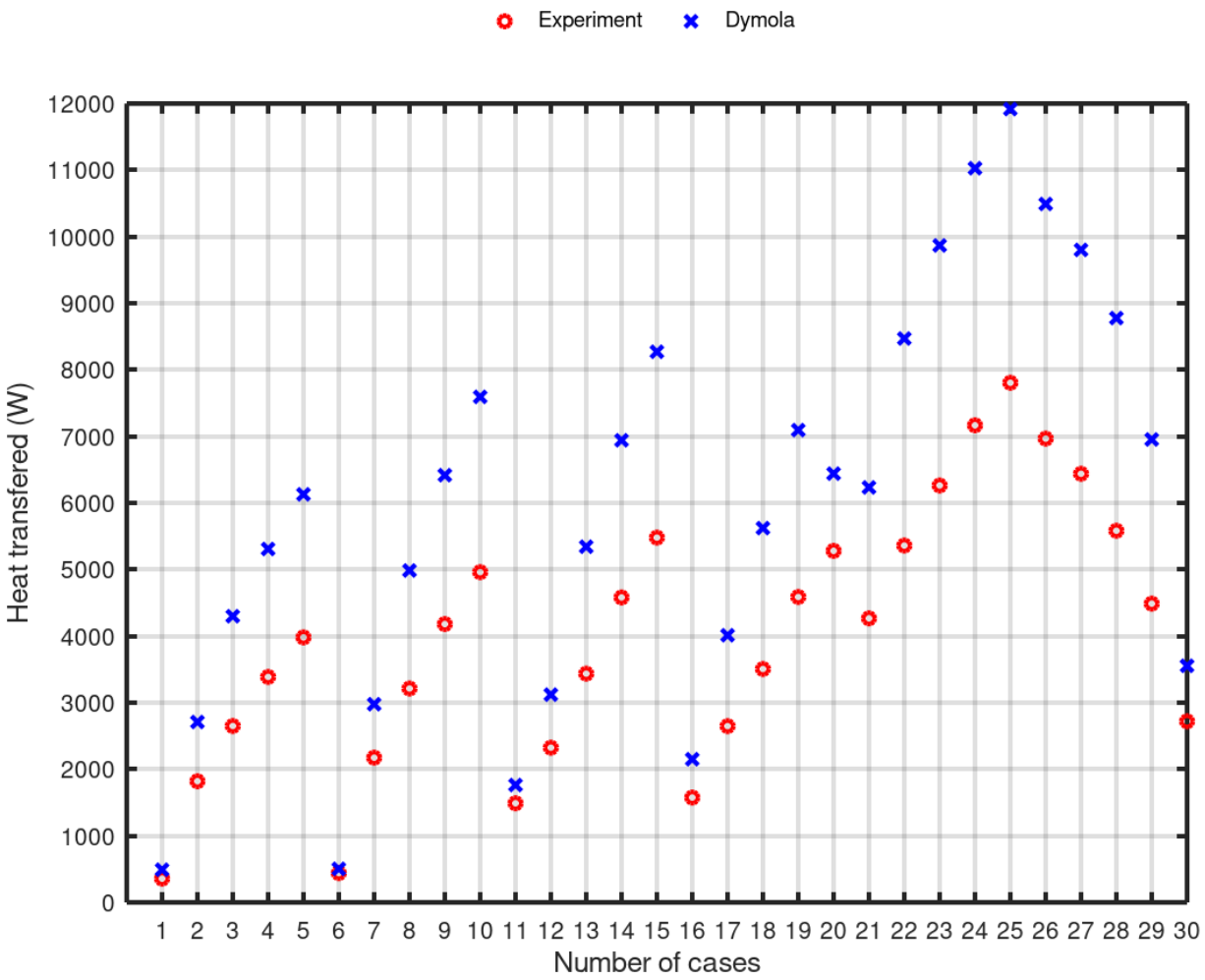

DUHS HEAT RESISTANCE

$$R = R_{CO2} + R_{Wall} + R_{Air}$$

$$\frac{1}{UA} = \frac{1}{h_h A_{CO2}} + \frac{t}{k A_{Wall}} + \frac{1}{h_c A_{Air}}$$

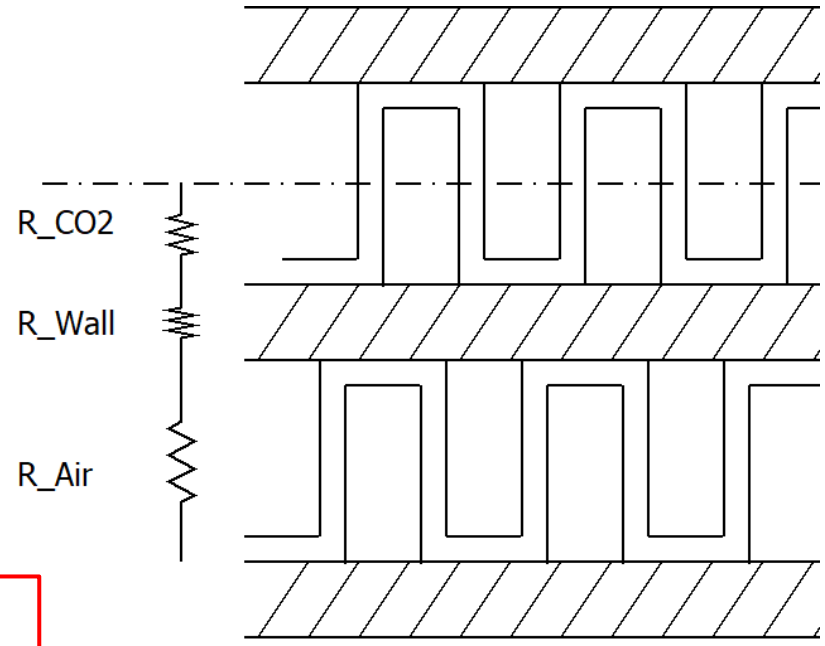

Overall HTC coefficient mainly depends on

$$R_{CO2} + R_{Wall} \ll R_{Air}$$

$$h_c = \frac{k}{D_h} \cdot \left(3.66 + \frac{0.0668\, Gz}{1 + 0.0358\, Gz^{2/3}}\right)$$

Hausen, Re < 2300

$$h_c = \frac{k}{D_h} \cdot \left(\frac{(\xi/8)\, Re\, Pr}{1 + 12.7\sqrt{(\xi/8)}(Pr^{2/3} - 1)}\right)\left[1 + \left(\frac{D_h}{L}\right)^{2/3}\right]$$

Gnielinsky, 2300 <Re < 1e6

DUHS – AIR SIDE HTC

- Air side HTC extrapolated with Wilson plot method

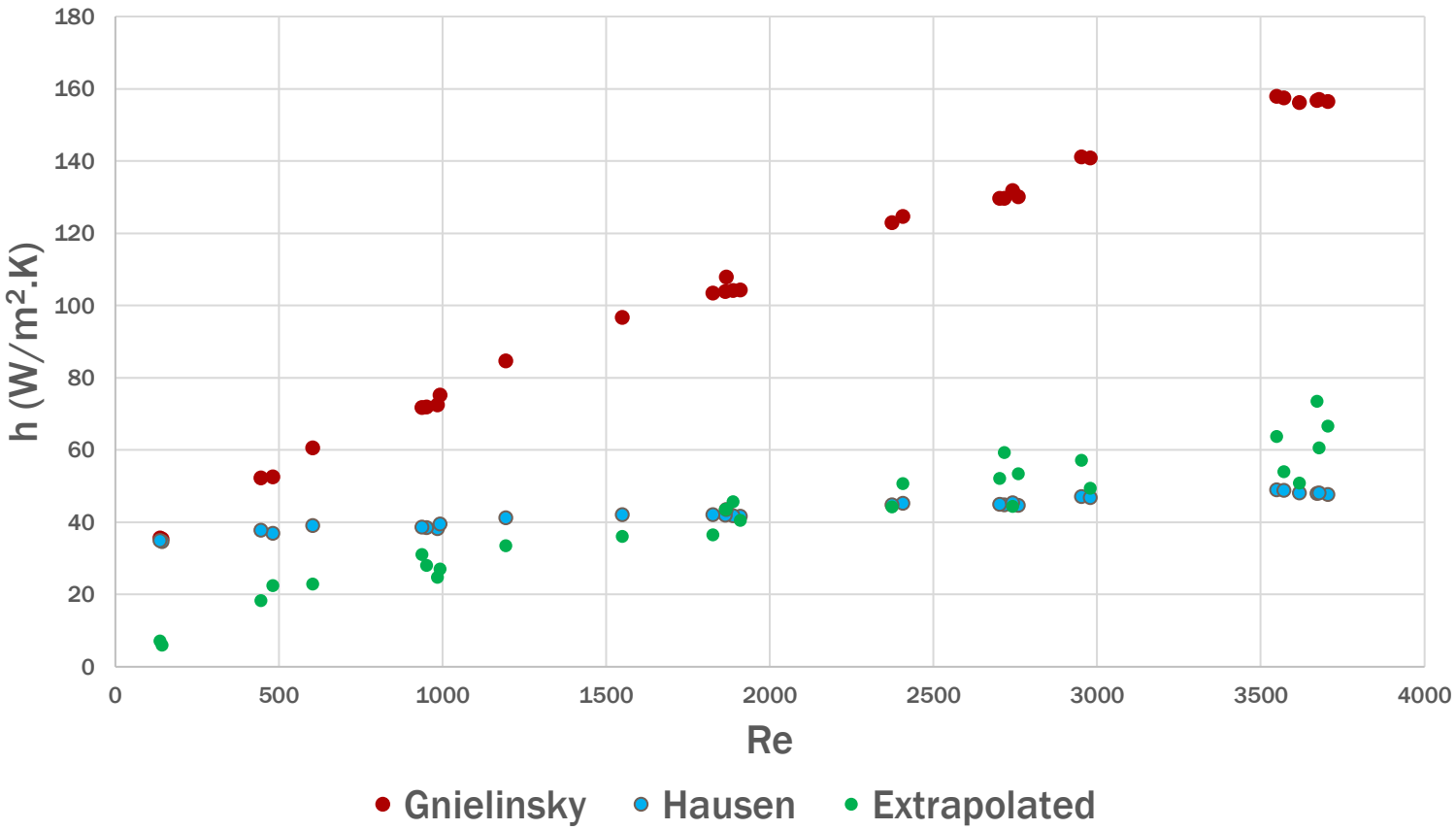

DUHS – AIR SIDE HTC

- Air side HTC correlation:

$$j = 0.024\, Re^{-0.3}$$

$$h_c = \frac{j\, u_m\, \rho\, c_p}{Pr^{2/3}}$$

Valid for straight fins
200 < Re < 3700

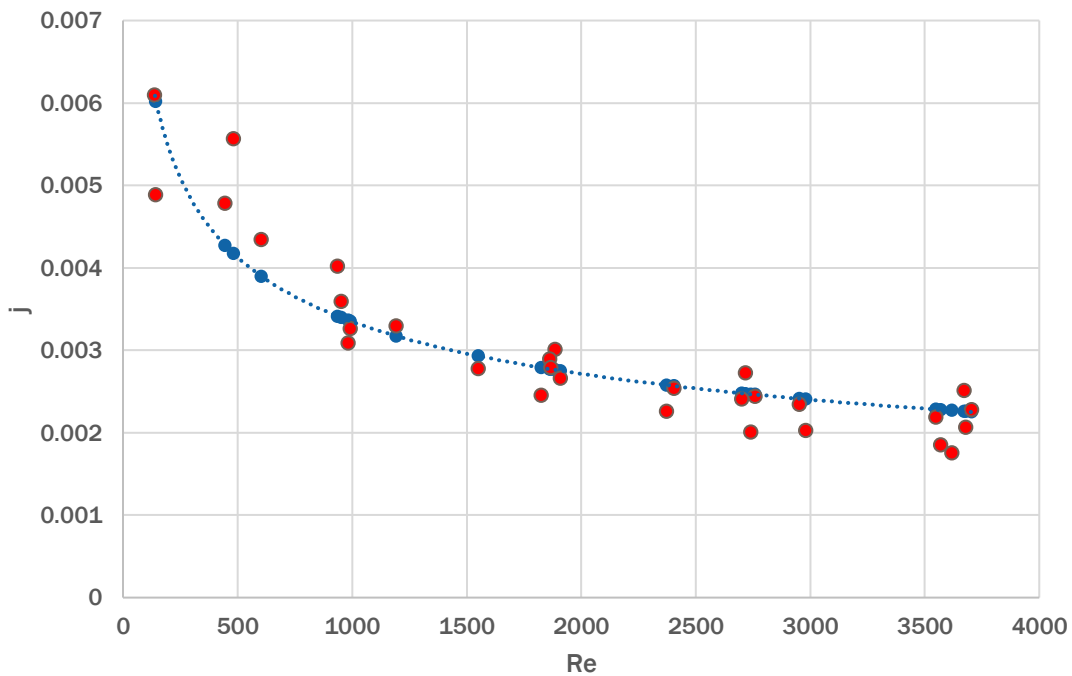

DUHS – AIR SIDE CORRECTED

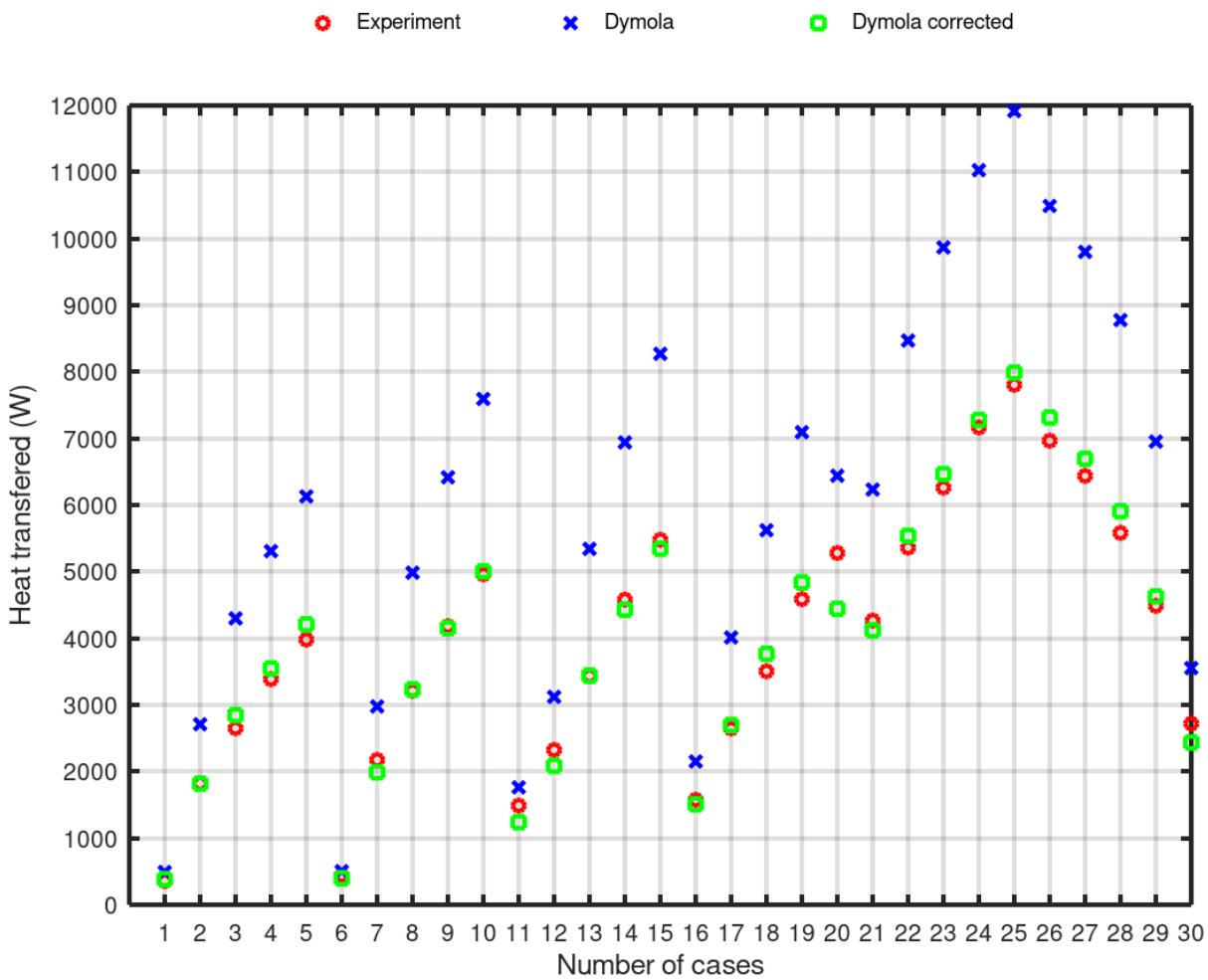

OPTIMISATION OF THE CHX EXPERIMENTAL CAMPAIGN

- Aim: Testing thermal-hydraulic performance of CHX mock-up in CVR lab
- Ongoing steam generator vessel fabrication.

	H2O side	CO2 side
Temperatures (°C)	<295	<200; 260>
Pressures (bar_a)	80	160
Total flowrate (g/s)	17	300
Re range	< 100; 700>	<500; 10000>

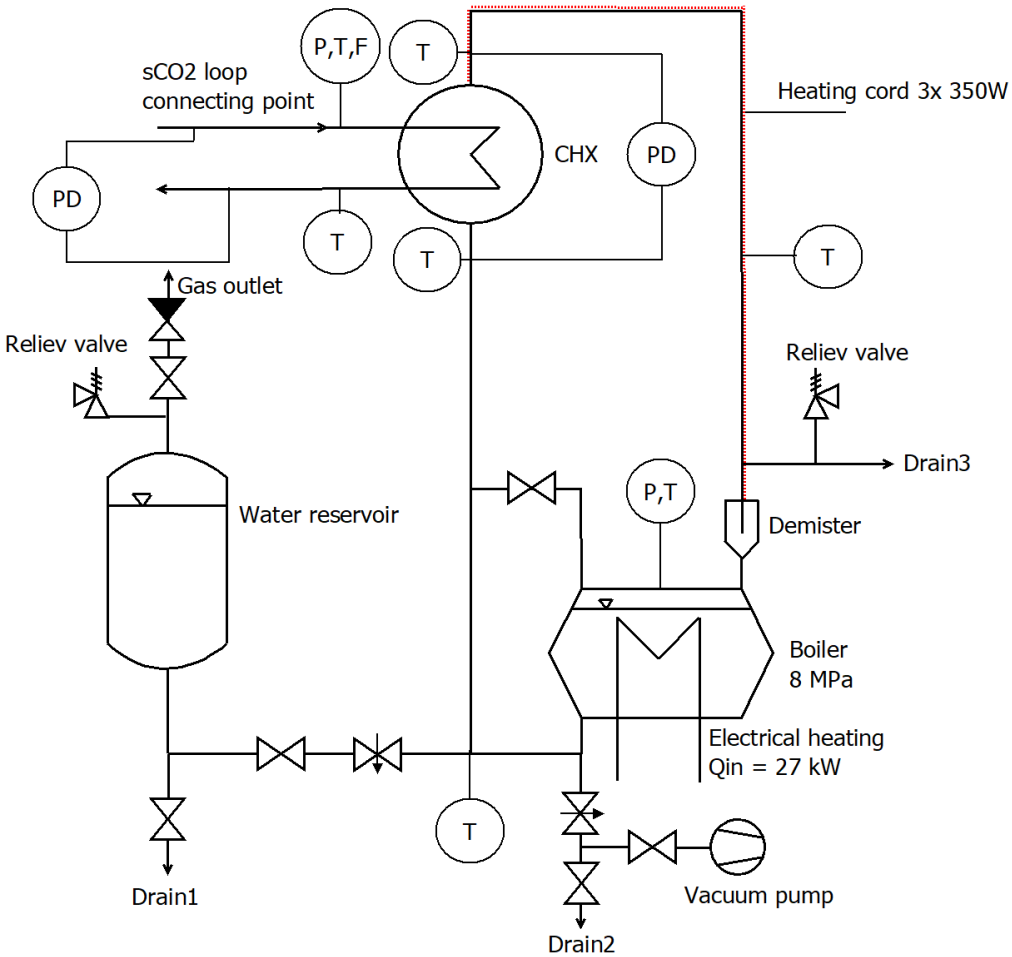

OPTIMISATION OF THE CHX EXPERIMENTAL CAMPAIGN

Steam generator vessel

NEXT STEPS

Activity	Status
sCO2 loop commissioning (electrical, pressure revisions)	Done
Steam generator vessel fabrication	Done
DUHS experimental stand completion (fabrication of the flanges)	Done
DUHS experimental stand commissioning and experimental campaign	Done
CHX experimental stand completion and experimental campaign	Ongoing
Data postprocessing and Deliverables report	July 2022

CONTENT

Turbomachine

Haikun Ren

University of Duisburg-Essen

OBJECTIVES ON THE TURBOMACHINERY

- Objectives in sCO2-4-NPP
  - Conceptual design of sCO2-4-NPP turbomachine
    - Fulfilling requirements from cycle layout
    - Specifying technical data of the turbomachine
  - Further development and tests of sCO2-HeRo turbomachine in HeRo loop in Essen, Germany
    - Validation of newly applied technology and new design
    - Experimental and industrial experience and recommendations

AERODYNAMIC DESIGN OF SCO2-4-NPP TURBOMACHINE

- Design based on the cycle design parameters
  - Compressor's main dimensions
  - Turbine's main dimensions

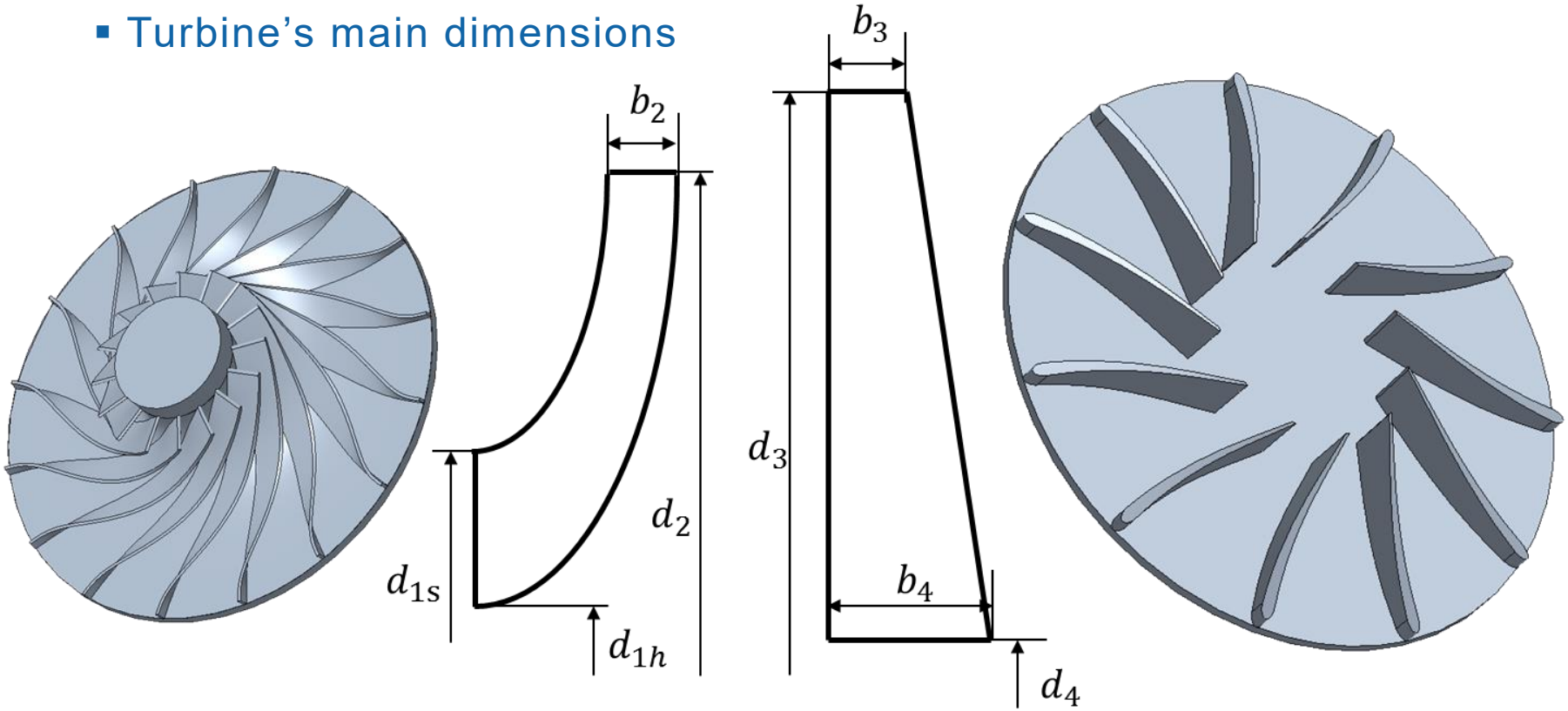

AERODYNAMIC DESIGN OF SCO2-4-NPP TURBOMACHINE

- Off-design using validated mean-line tool considering internal losses
  - Verified by simulation results

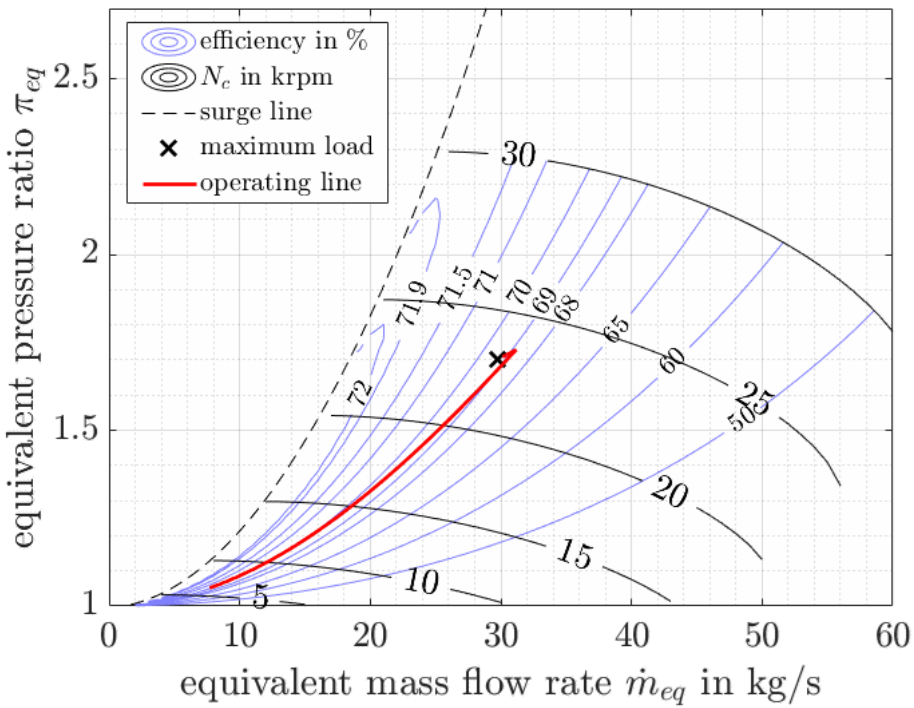

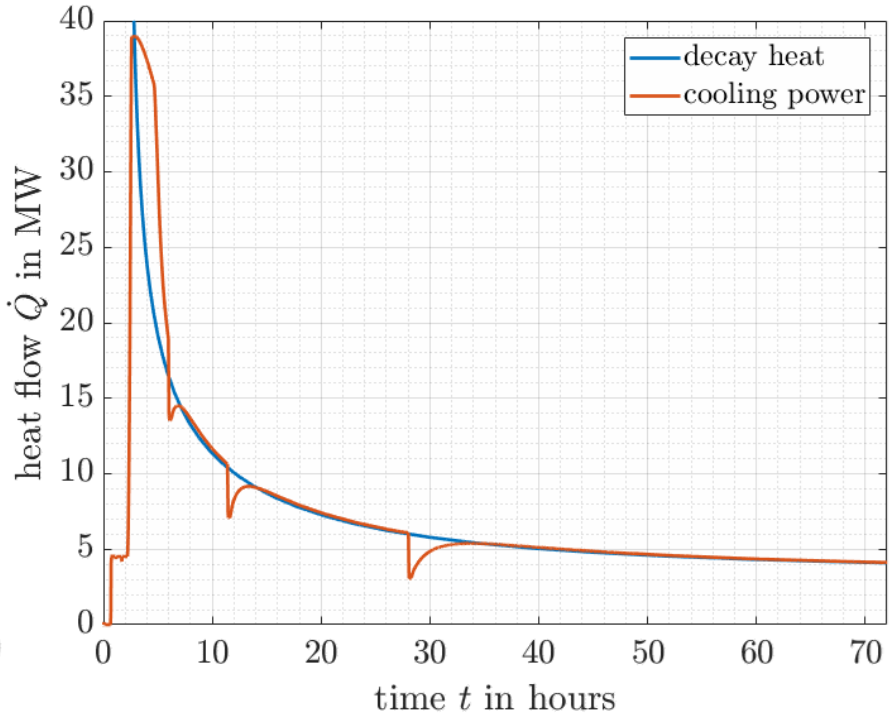

AERODYNAMIC DESIGN OF SCO2-4-NPP TURBOMACHINE

- Off-design using validated mean-line tool considering internal losses
  - Verified by simulation results

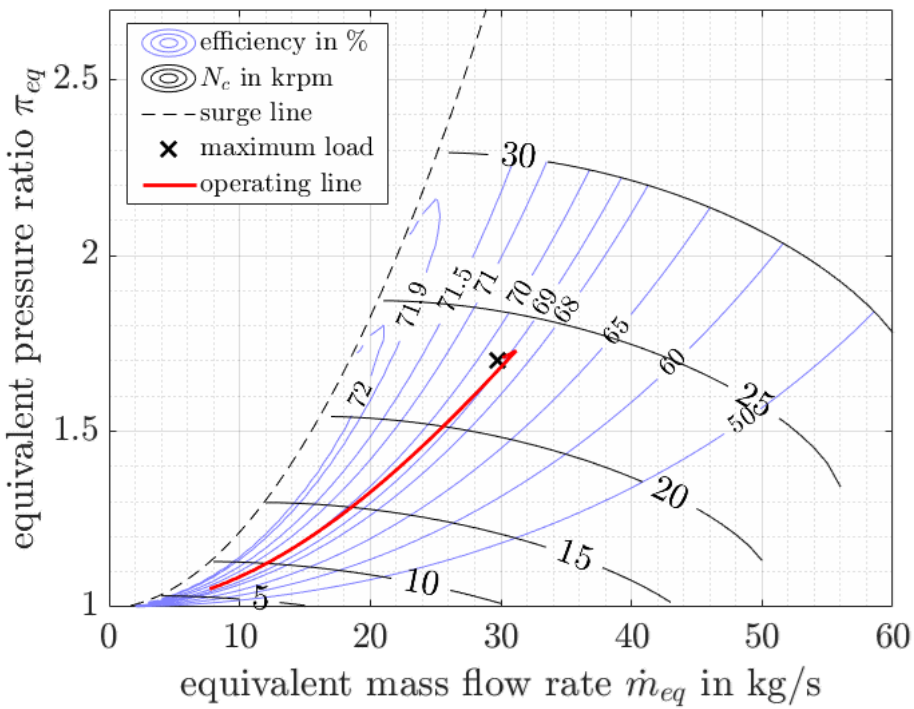

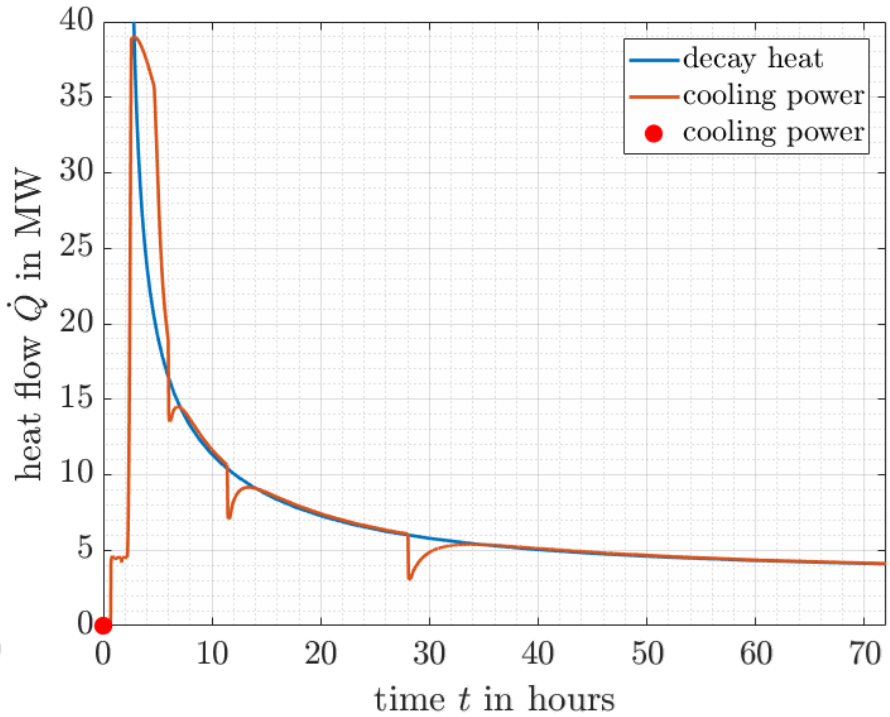

MECHANICAL DESIGN OF SCO2-4-NPP TURBOMACHINE

- Scale up from the sCO2-HeRo machine

sCO2-HeRo

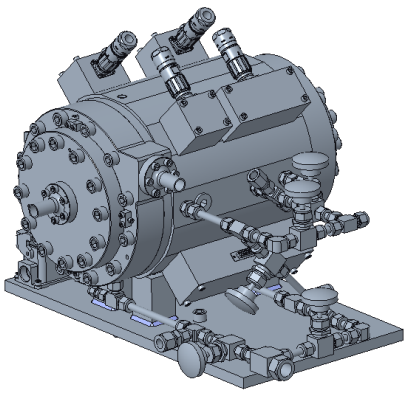

sCO2-4-NPP

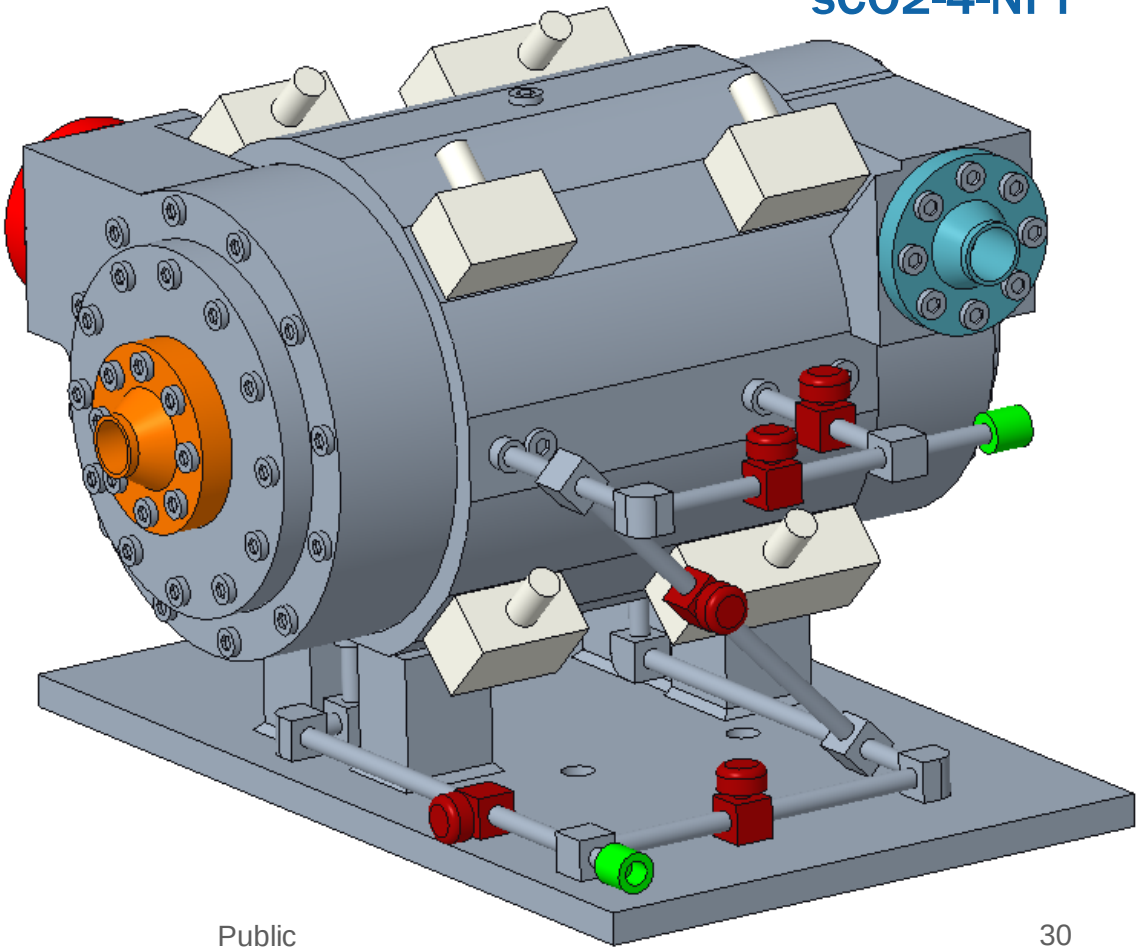

OUTER VIEWS OF SCO2-4-NPP TURBOMACHINE

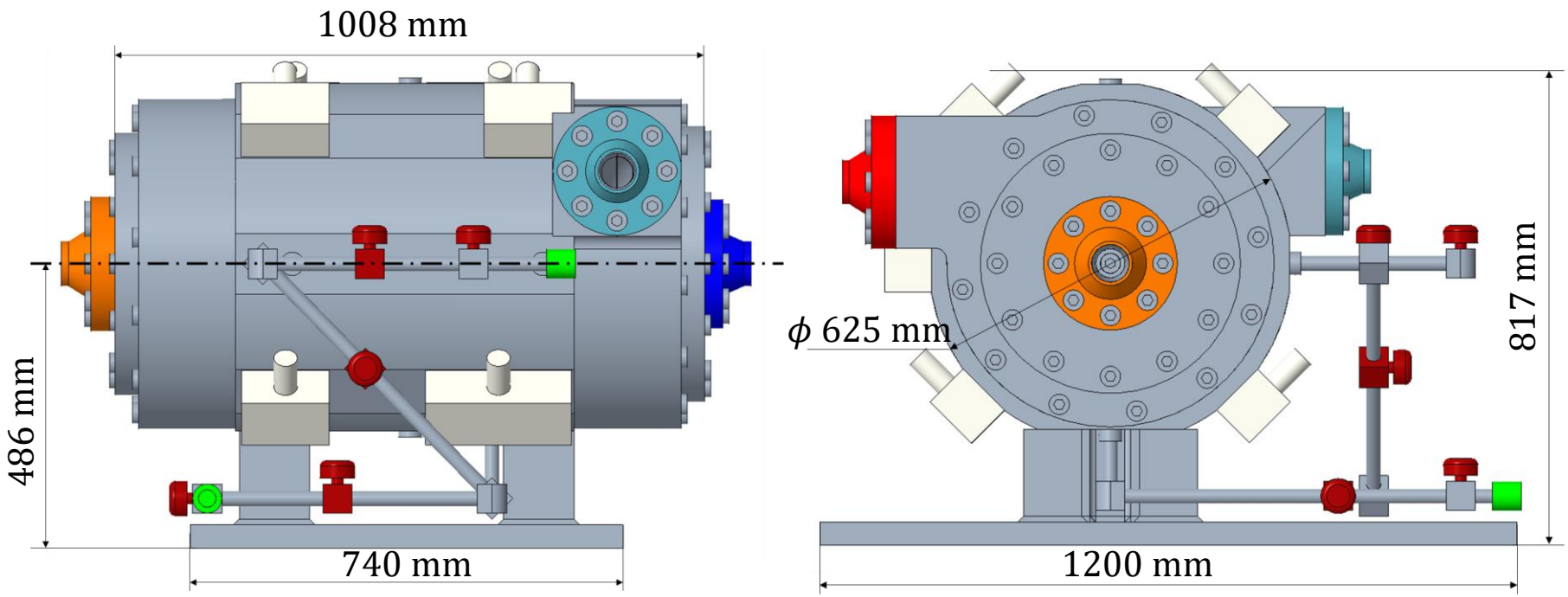

Turbine inlet

Compressor inlet

Control valve

Turbine outlet

Compressor outlet

Interfaces to the loop

IMPROVEMENT OF THE SCO2-HERO TURBOMACHINE

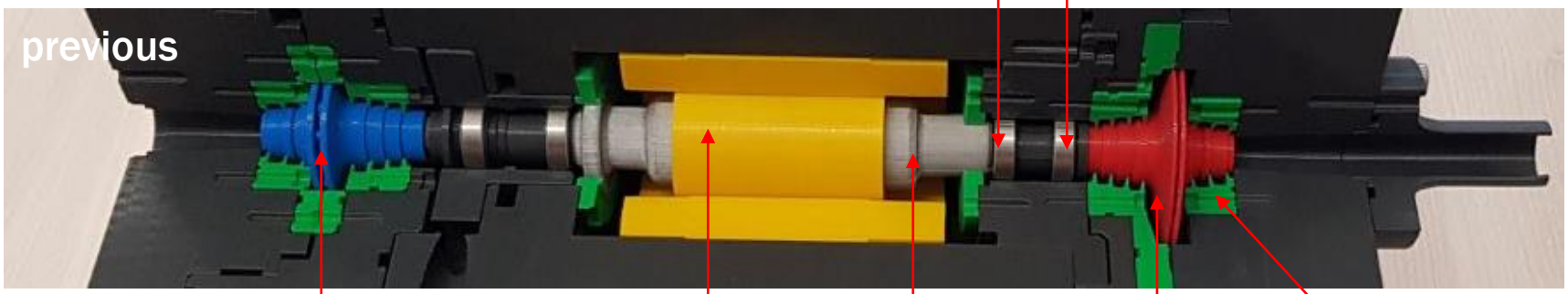

sCO2-HeRo^{B}

sCO2-HeRo^{M}

Compressor wheel

Rotor/Stator generator

Shaft

Turbine wheel

Labyrinth seal

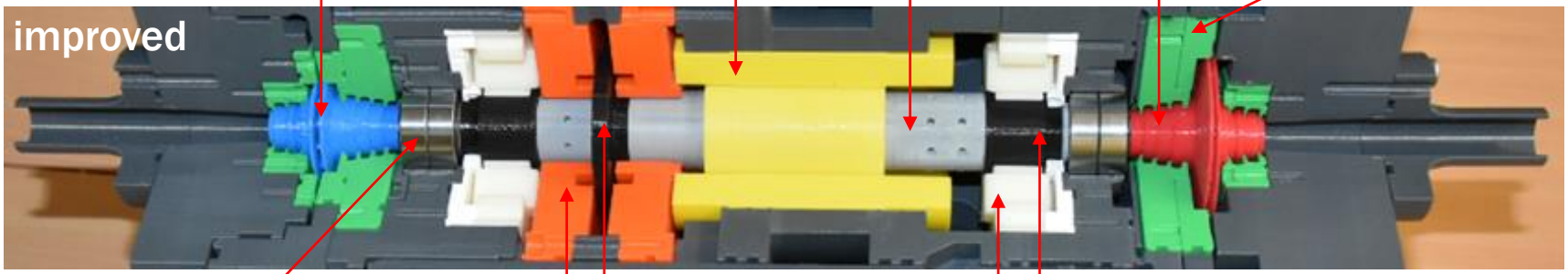

Safety bearing

Rotor axial AMB

Stator axial AMB

Rotor radial AMB

Stator radial AMB

TURBOMACHINE ELEMENTS AND ASSEMBLY

Rotor

Labyrinth seals

Radial AMB

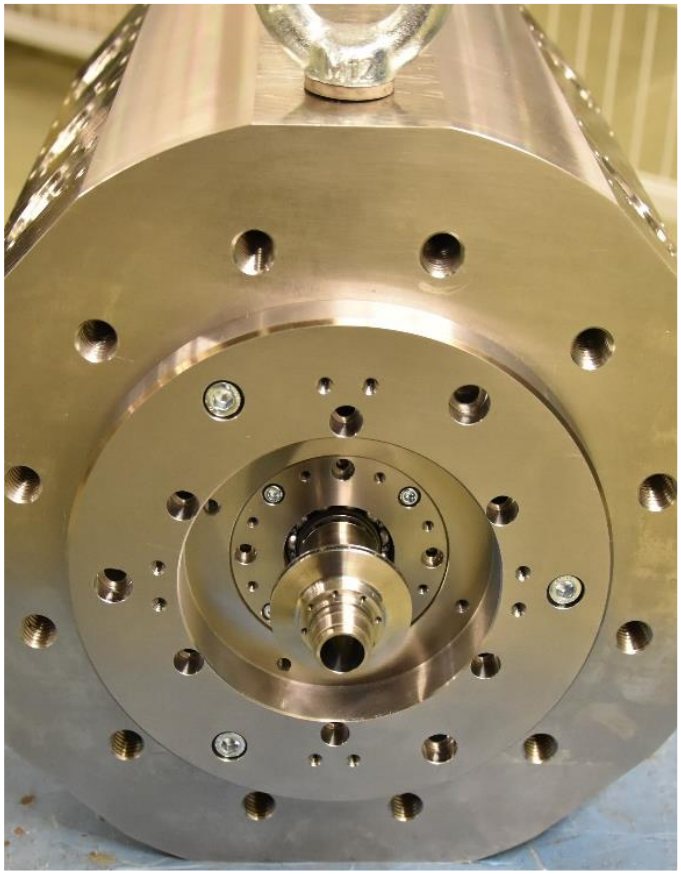

Assembled machine
(view from compressor side)

TEST WITH MAGNETIC BEARINGS IN ESSEN

Design, manufacturing and assembly finished

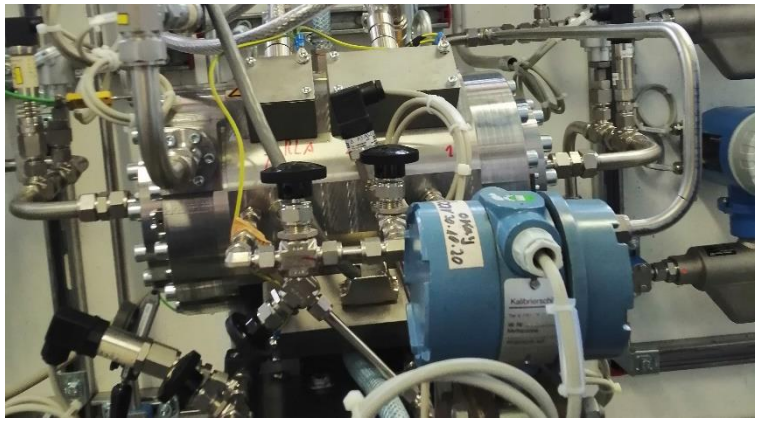

Commissioning of turbomachine with magnetic bearings in HeRo loop

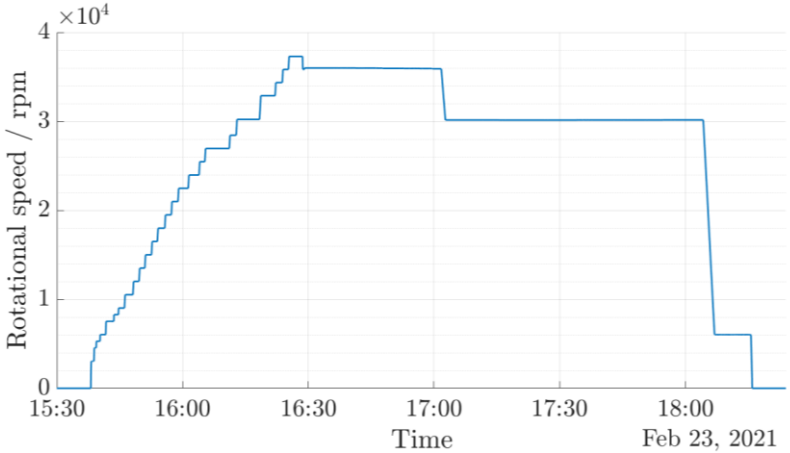

Test results available to validate robust design and performance maps

- Magnetic bearings can be applied

ALTERNATIVE: GAS BEARING

- Ensure availability of second suitable, validated bearing technology for operation in sCO_2
- Design and manufacturing of test rig by TU Kaiserslautern
- Preliminary tests on compatibility and operation at Univ. Stuttgart

Results:

- The resistance of the material under supercritical CO_2 conditions is confirmed
- The measurement data were used to carry out an initial validation of the tool
- The numerical model enables the estimation of the mass flow rate
- All results show possibility to apply this technology

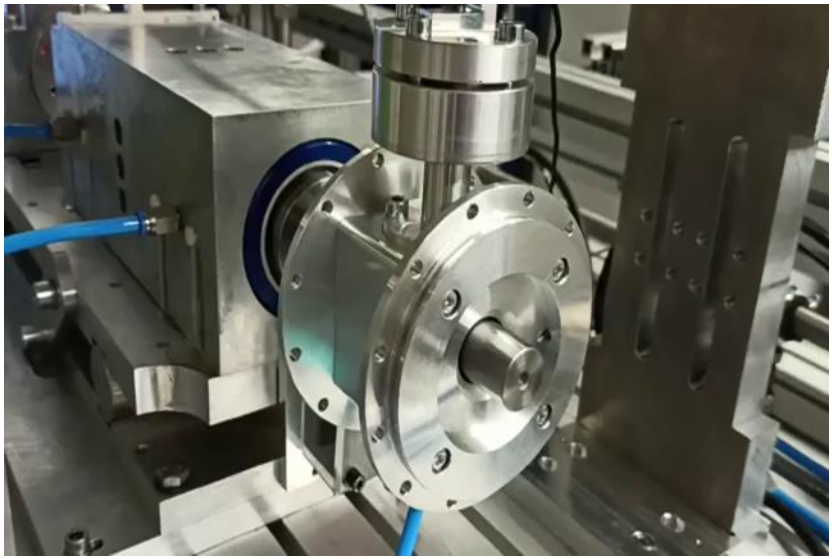

TEST RESULTS IN SUSEN AND HERO LOOP

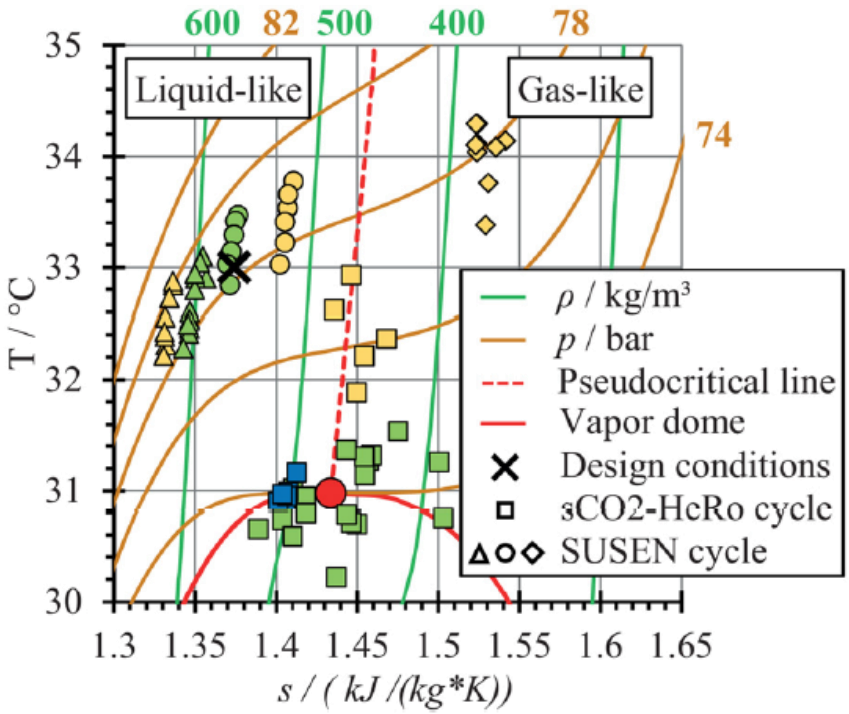

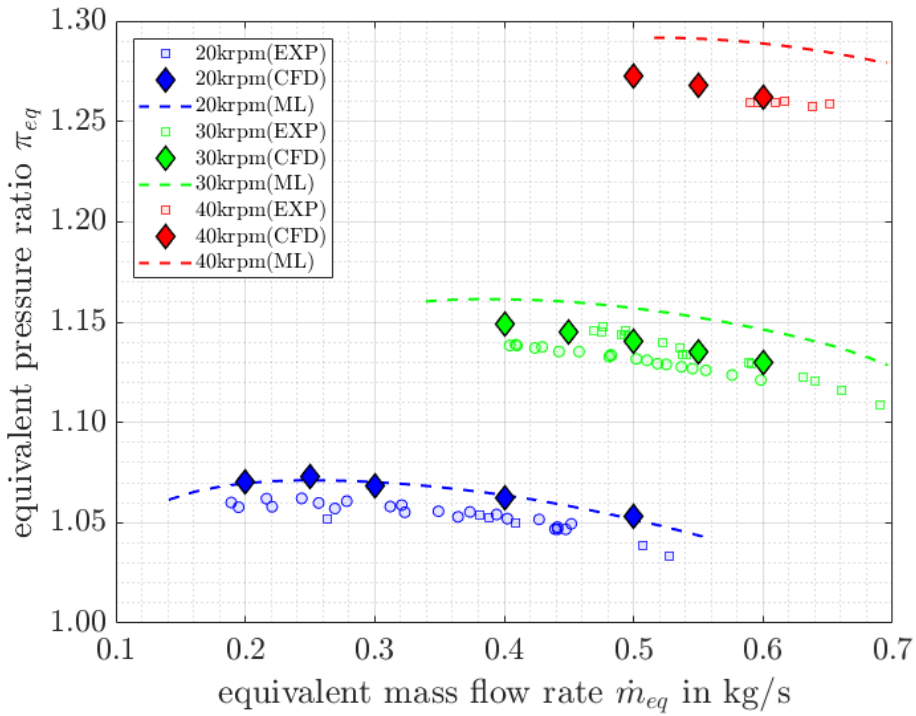

- Investigation of various inlet conditions
- Verification of reproducibility of the measurements
- Validation of CFD and mean-line codes

PUBLICATIONS

Ren et al. (2021)

Hofer et al. (2021)

Hacks et al. (2022)

UNIVERSITÄT DUISBURG ESSEN
Offen im Denken

DuEPublico 2
Duisburg-Essen Publications online

Suche

UB | E-Publikationen | Dissertationen | OER | Über DuEPublico | 0 | Anmelden

Artikel / Aufsatz / Mean-line analysis for supercritical CO2 centrifugal compressors by using...

Tagungsbeitrag | Di., 30. März. 2021 | CC BY 4.0 | Veröffentlicht

+ auf die Merkliste | Aktionen

Mean-line analysis for supercritical CO2 centrifugal compressors by using enthalpy loss coefficients

Ren, Haikun; Hacks, Alexander; Schuster, Sebastian; Brillert, Dieter

ScienceDirect

Journals & Books

View PDF | Download full issue

Outline

Energy
Volume 247, 15 May 2022, 123500

ELSEVIER

Simulation, analysis and control of a self-propelling heat removal system using supercritical CO_2 under varying boundary conditions

Markus Hofer [a], Haikun Ren [b], Frieder Hecker [c], Michael Buck [a], Dieter Brillert [b], Jörg Starflinger [a]

Show more

+ Add to Mendeley | Share | Cite

https://doi.org/10.1016/j.energy.2022.123500

Get rights and content

Under a Creative Commons license

Open access

ASME DIGITAL COLLECTION
THE AMERICAN SOCIETY OF MECHANICAL ENGINEERS

Cart | Univ

Journal of Engineering for Gas Turbines and Power

Issues | Accepted Manuscripts | All Years | Purchase | For Authors | About | Search...

Volume 144, Issue 4
April 2022

RESEARCH-ARTICLE

Experimental Data of Supercritical Carbon Dioxide (sCO_2) Compressor at Various Fluid States

Alexander J. Hacks, Ihab Abd El Hussein, Haikun Ren, Sebastian Schuster, Dieter Brillert

Check for updates

+ Author and Article Information

J. Eng. Gas Turbines Power. Apr 2022, 144(4): 041012 (9 pages)
Paper No: GTP-21-1469 https://doi.org/10.1115/1.4052954
Published Online: January 25, 2022 Article history

PUBLICATIONS

- Hacks et al. (2020): Operational experiences and design of the sCO2-HeRo loop
- Hacks et al. (2021): Impact of volumetric system design on compressor inlet conditions in supercritical CO_2 cycles
- Ren et al. (2021): Mean-line analysis for supercritical CO_2 centrifugal compressors by using enthalpy loss coefficients
- Hofer et al. (2021): Simulation, analysis and control of a self-propelling heat removal system using supercritical CO_2 under varying boundary conditions
- Hacks et al. (2022): Turbomachine operation with magnetic bearings in supercritical carbon dioxide environment (submitted)
- Hacks et al. (2022): Experimental data of supercritical carbon dioxide (sCO_2) compressor at various fluid states
- Schuster et al. (2022): Lessons from testing the sCO2-HeRo turbo-compressor-system

https://www.uni-due.de/tm/publikationen

CONCLUSIONS AND OUTLOOK

- sCO2-4-NPP:
  - New TAC machine with around 300 kWe
  - Relatively large operation range
  - Improvement of small scale TAC by applying magnetic bearing technology
  - New measurements within HeRo loop in Essen
  - Validation of CFD and mean-line codes with the experimental results

- Potential applications in other areas:
  - Waste heat recovery →
  - Concentrated solar power (CSP)
  - Other power generations (for certain operating point with higher efficiency)

SIMULATIONS / SYSTEM ARCHITECTURE INTEGRATED IN NPP

WP 5

Michael BUCK, USTUTT

Albannie CAGNAC, EDF

OBJECTIVES AND CHALLENGES

- Define final architecture of a module
  - ⇒ Adapt the final design of equipments
  - ⇒ Search for compacity
- Integration on an existing plant design
  - ⇒ Possibility of retrofitting
  - ⇒ Adaptation to existing constraints
- Adaptation of thermal-hydraulic codes to an sCO2 cycle
  - ⇒ Coupling the upscaled loop models to the plant
- Convergence of accidental transients with the sCO2 cycle
  - ⇒ Regulations, adaptation to the SBO scenario

ARCHITECTURE AND THERMODYNAMIC DESIGN

SCO2 SYSTEM EQUIPMENTS

CHX Exchanger

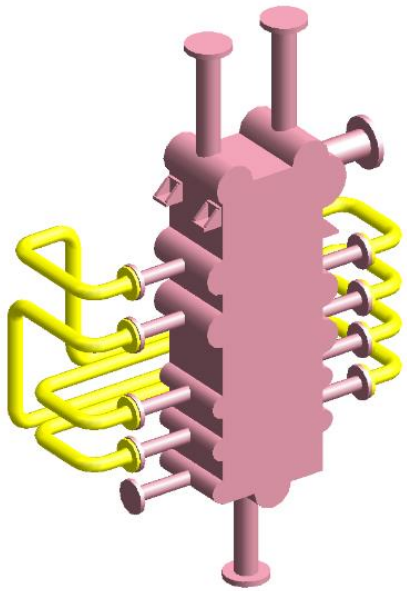

DUHS Exchangers with fin-fan coolers

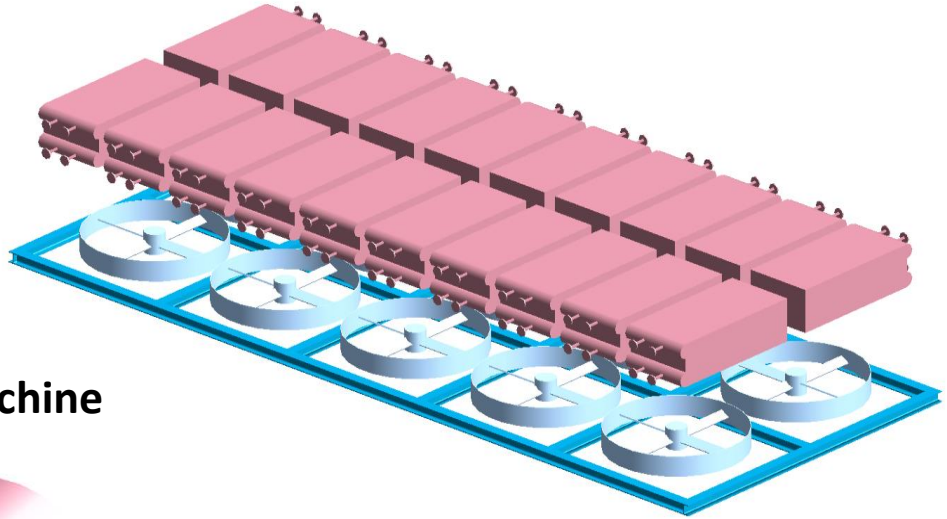

Turbomachine

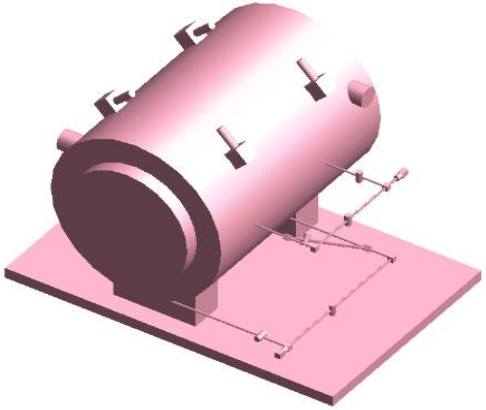

SCO2 SYSTEM ARCHITECTURE

- Search for modularity and compactness
- System
  - 13,5m * 6,2 m
  - Height : 9,8m

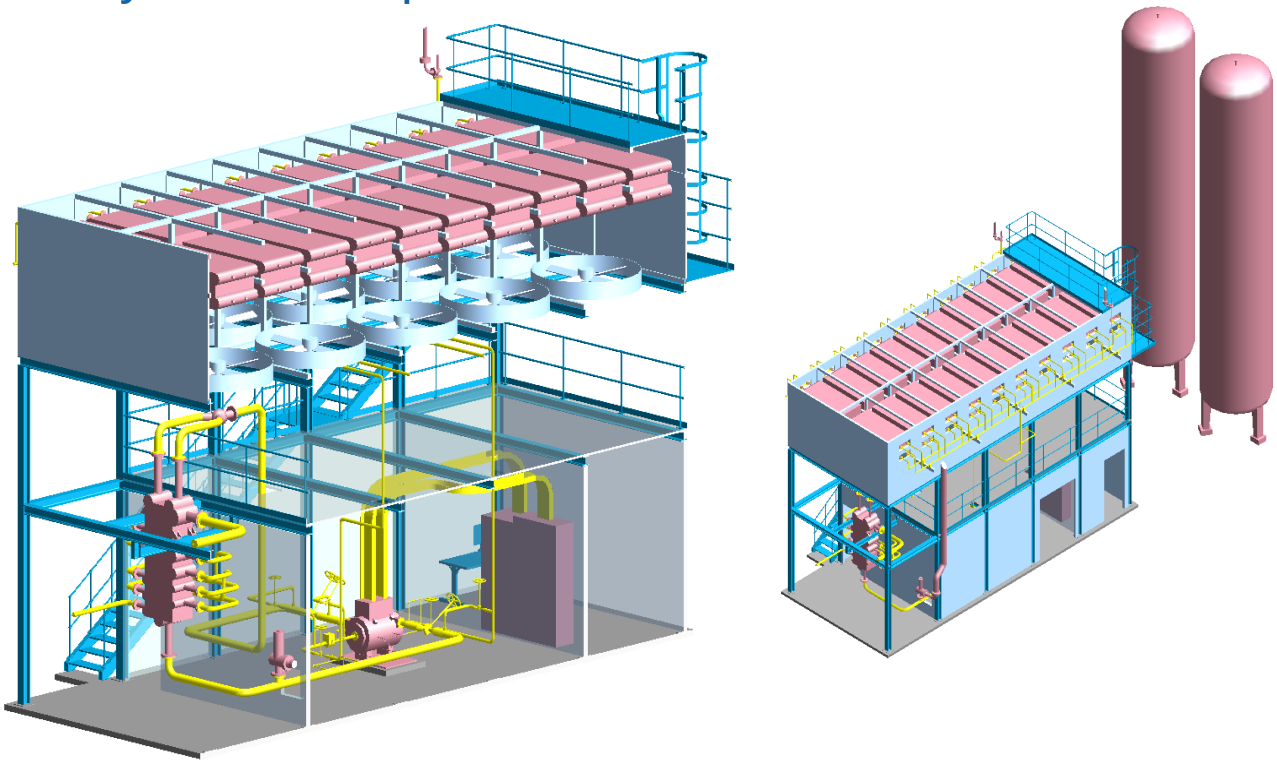

- Potential for improvement: Optimisation of DUHS, Use of an alternative cooling system, Reduction of CO2 storage

SCO2 SYSTEM INTEGRATION

- Challenges :
  - Limited space available on site
  - Minimum of 4 modules required
  - Need to optimise the connection with the NPP existing pipes

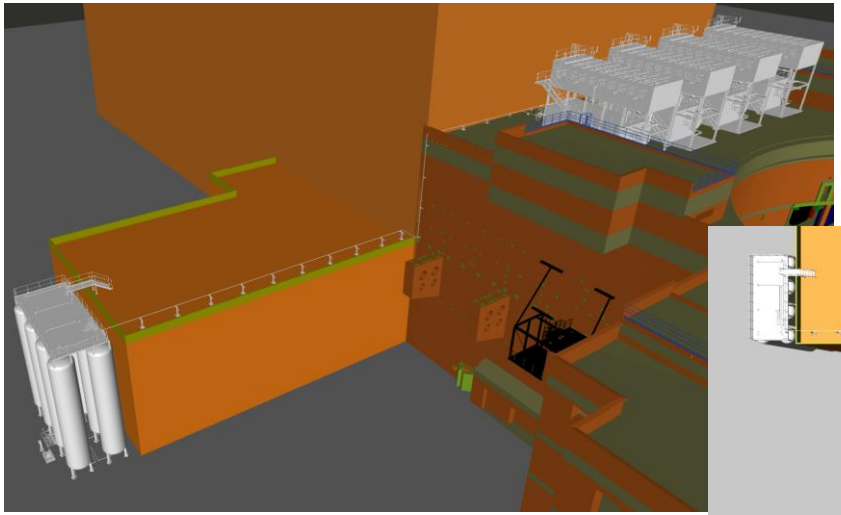

THERMODYNAMIC DESIGN : OBJECTIVES

- Interaction of the sCO2 loop with the rest of the NPP
  - Athlet (water side) – Dymola (CO2 side) coupled simulation was performed for changing ambient air temperature from plus 15 °C to minus 45 °C (simulation for plus 45 °C was already performed in D2.2)
  - Control: TAC speed / UHS fan speed / Changing loop filling / UHS bypassing / Water condensate outlet temperature / Different control strategies tests
- sCO2 loop starting procedure
  - Push-up start method was tested in Dymola (without Athlet).
  - Push-up start accessories partly included, the rest replaced by boundary conditions

RESULTS

Dymola model components

- without push-up start accessories

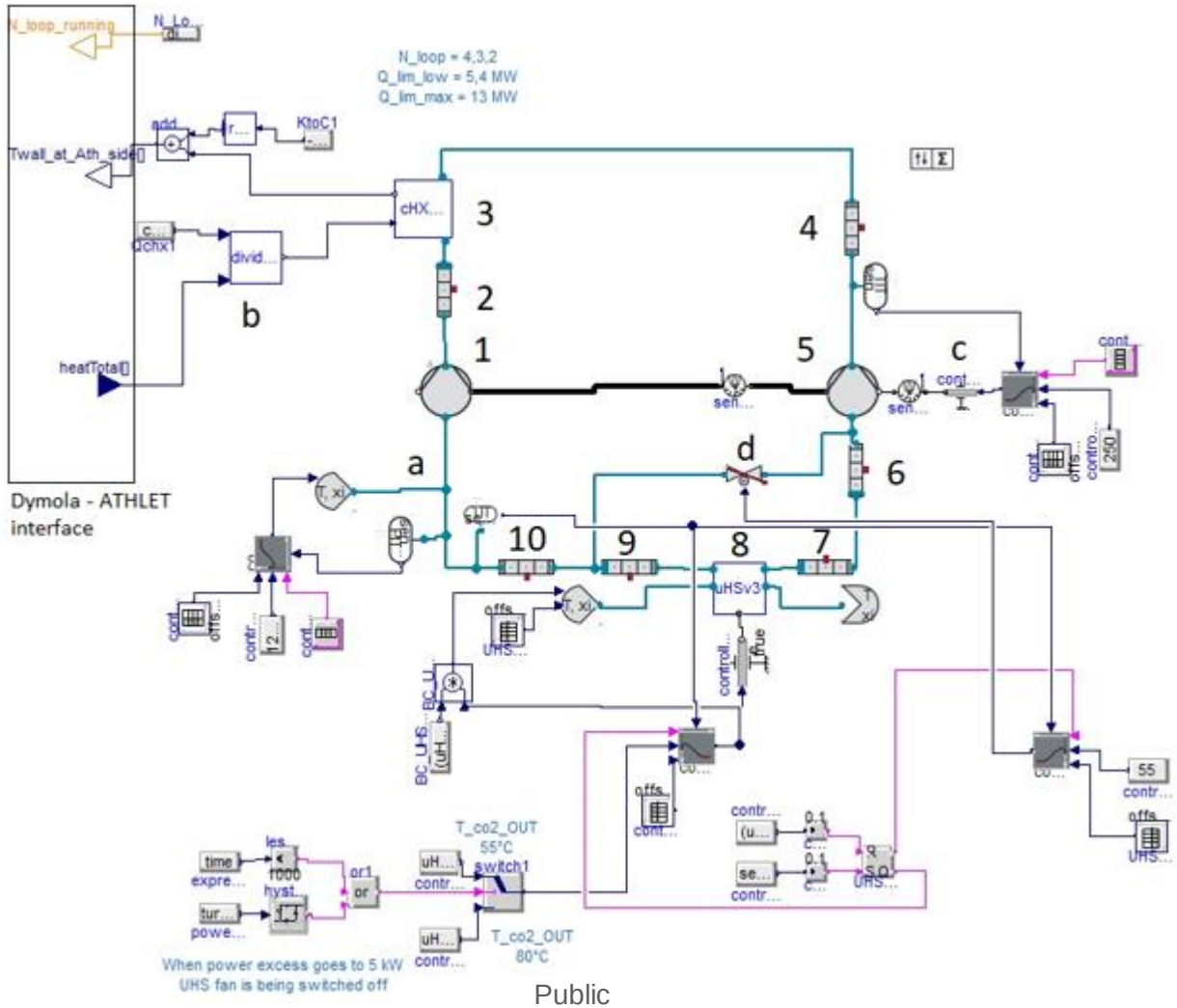

RESULTS

Basic results

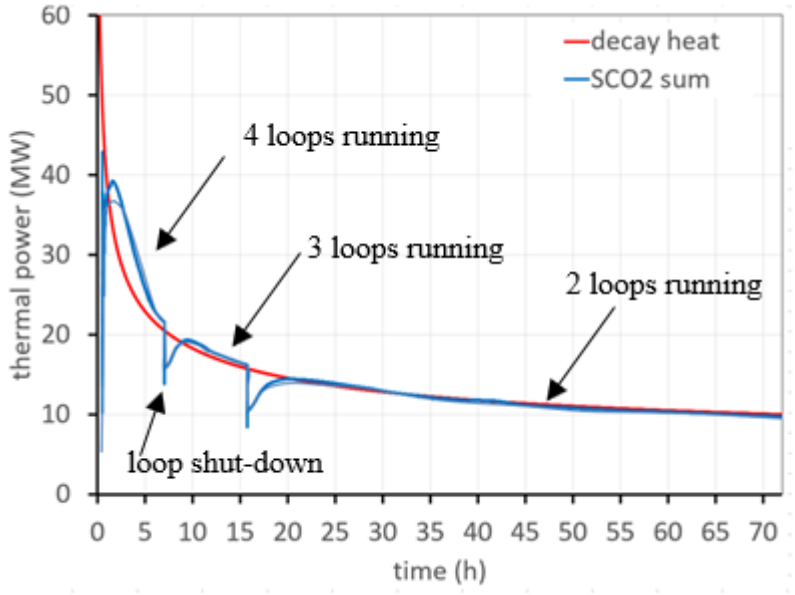

Decay heat removal

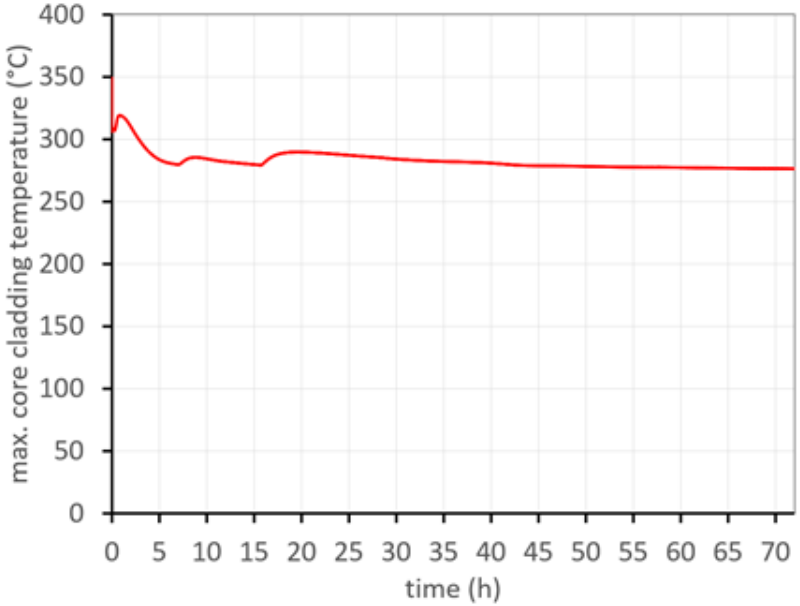

Max. core cladding temperature

Push-up start accessories

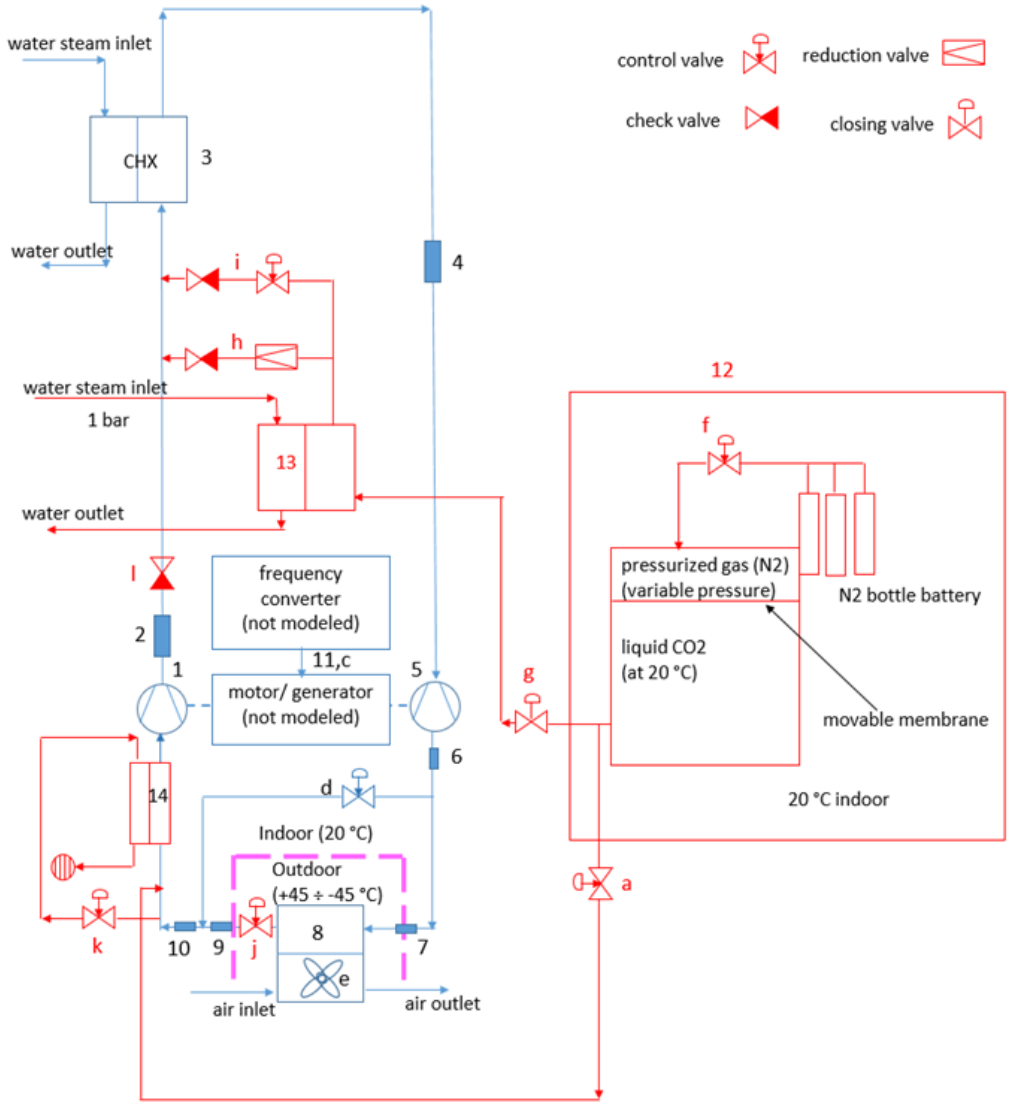

Symbol	Component
1	Turbocompressor
2	Interconnecting piping
3	CHX (CO_2 side)
4	Interconnecting piping
5	Turbine
6,7	Interconnecting piping
8	UHS
9,10	Interconnecting piping
11	Motor / generator with frequency converter
12	CO_2 pressure source
13	Starting CO_2 evaporator
14	Starting CO_2 cooler
a	Filling
b	Divider (not visualized here)
c	TAC speed control
d	UHS bypass valve
e	Fan speed control
f	Nitrogen control valve
g	Closing valve
h	Starting reduction valve
i	Starting control valve
j	UHS outlet control valve
k	Compressor inlet pressure control valve (for start only)
l	Check valve at compressor outlet

THERMOHYDRAULIC SIMULATIONS

ATHLET: OBJECTIVES & CHALLENGES

- Adaption of cycle layout to EDF proposal (pipe lengths and elevations)
- Modelling, test and integration of FIVES heat exchangers (CHX and UHS)
- Modelling of CHX is challenging due to various cold and warm water streams (with different heat transfer areas)

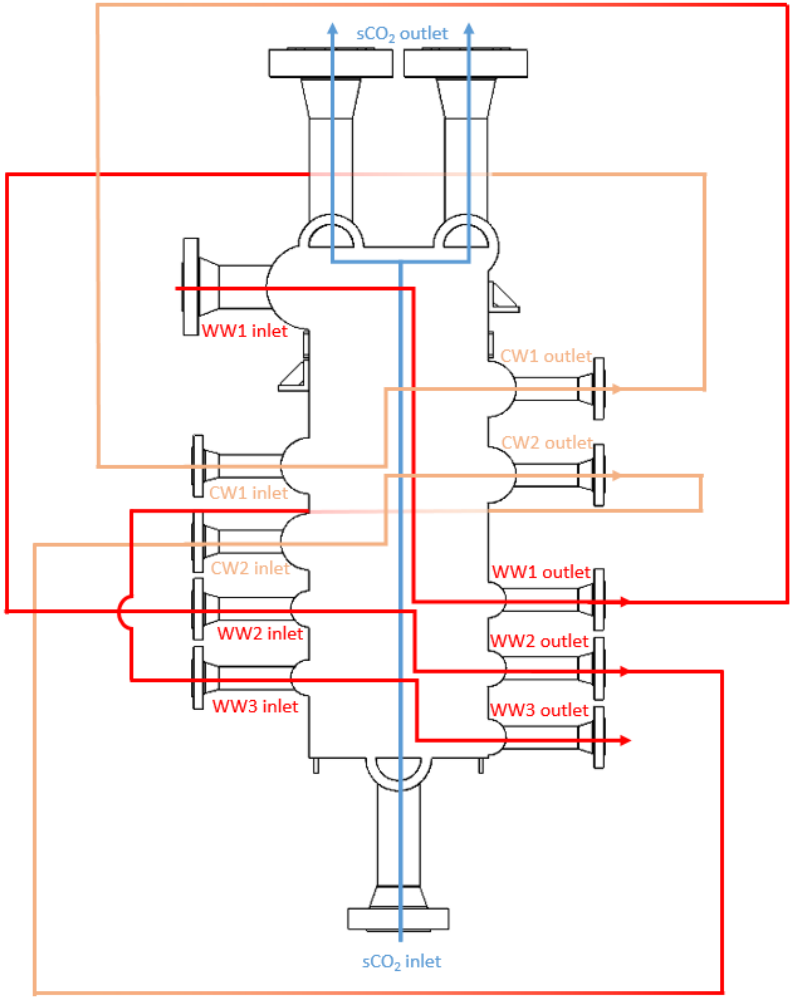

CHX: ATHLET RESULTS

- Comparison of FIVES design (solid line) and simulation (stars)

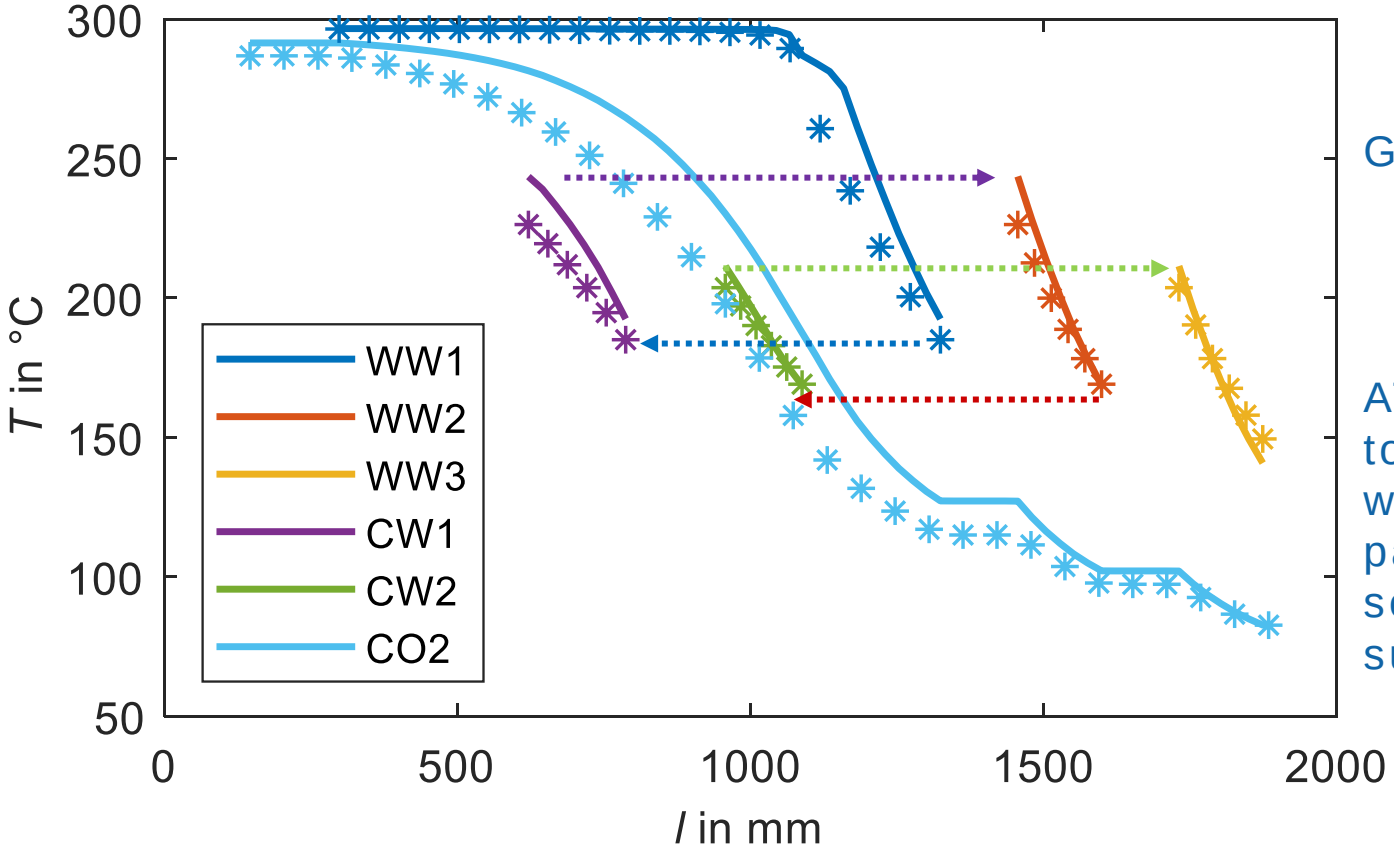

Good agreement

ATHLET standard tools combined with appropriate parameter selection proved sufficient

PWR: ATHLET RESULTS

- Simulation for 72 h with conservatively low decay heat curve

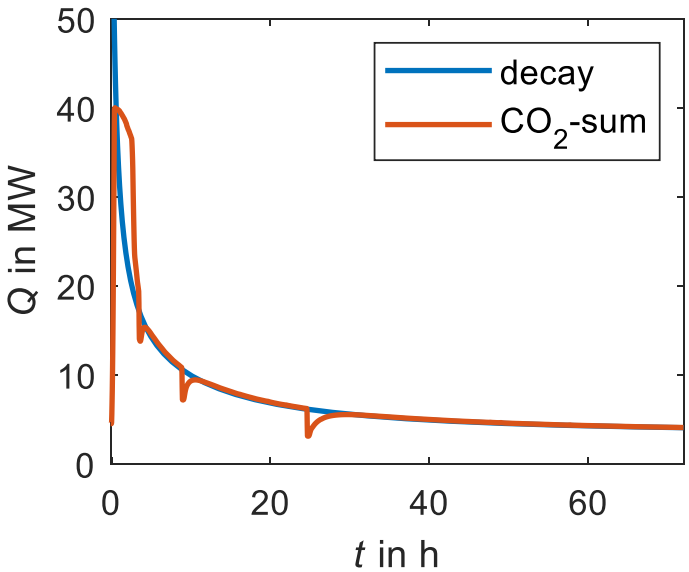

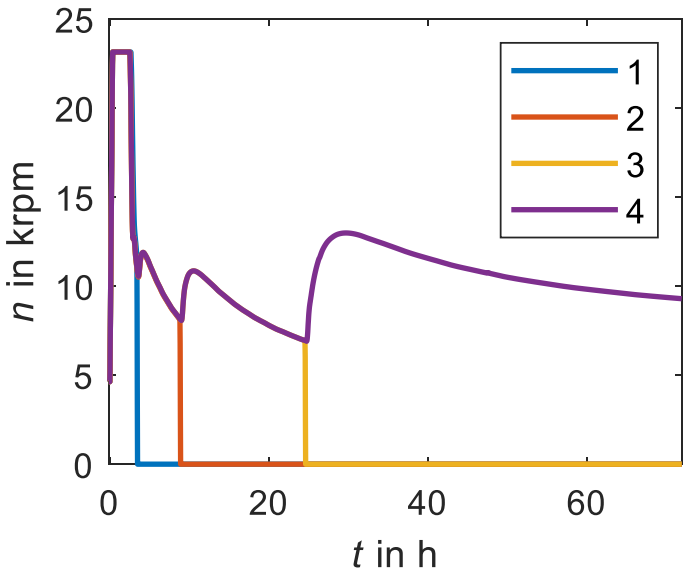

- Same behaviour as in D2.2, similar switch-off times (small differences due to slightly different pressures and mass flow rate in the cycle, resulting from supplied initial cycle inventory)

COMPARISON TO FORMER RESULTS

- Successful simulations of D2.2 could be repeated: only slight differences → Results are almost independent of the heat exchanger type
- Higher material mass and thermal inertia of heat exchangers
  - CHX: 3.9 t (D2.2: ~1 t)
  - UHS: 82.4 t for 1 unit with 20 cores (D2.2: ~20 t)
  - UHS thermal inertia may impact start-up/fast transients
- Pressure drop and installation height of CHX on the water side affects condensation/operation stability (in agreement with D2.2)
  → Too small internal connection pipe diameters in the CHX (between cold water and warm water streams) lead to instable operation

CATHARE OBJECTIVES & CHALLENGES

- Components modelling:
  - UHS from FIVES
  - Turbomachinery from Univ. Duisberg-Essen performance maps
  - CHX from FIVES
- Piping modelling:
  - Lengths, elevations and diameters updated from EDF layout
- Standalone sCO2 loop simulation with updated components and piping
- Integration of the updated sCO2 loop into EPR input deck
- Challenges:
  - CHX modelling due to complex cold and warm water streams and exchanges

CATHARE3 RESULTS: STANDALONE SCO2 LOOP

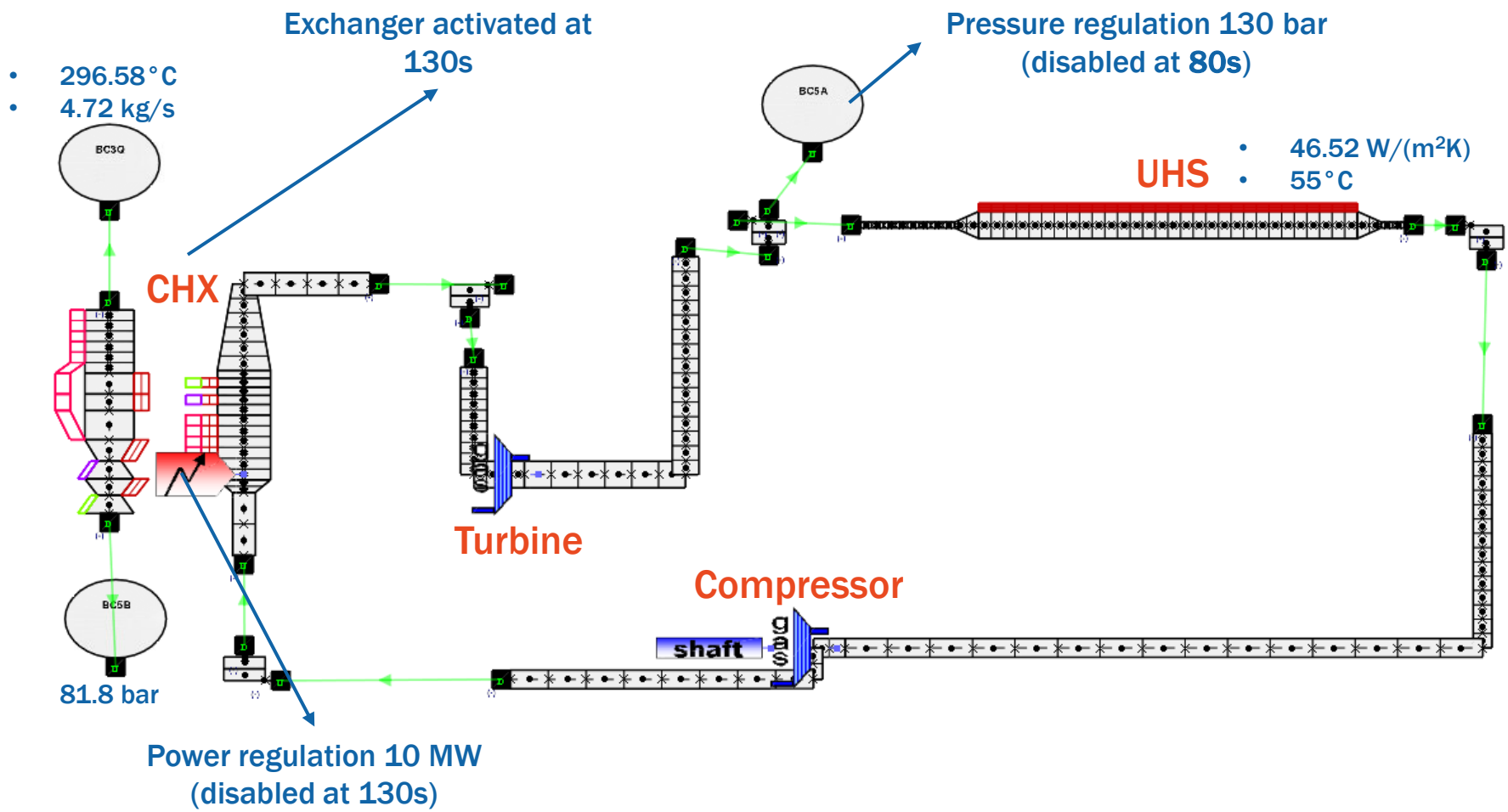

CATHARE3 RESULTS: STANDALONE SCO2 LOOP

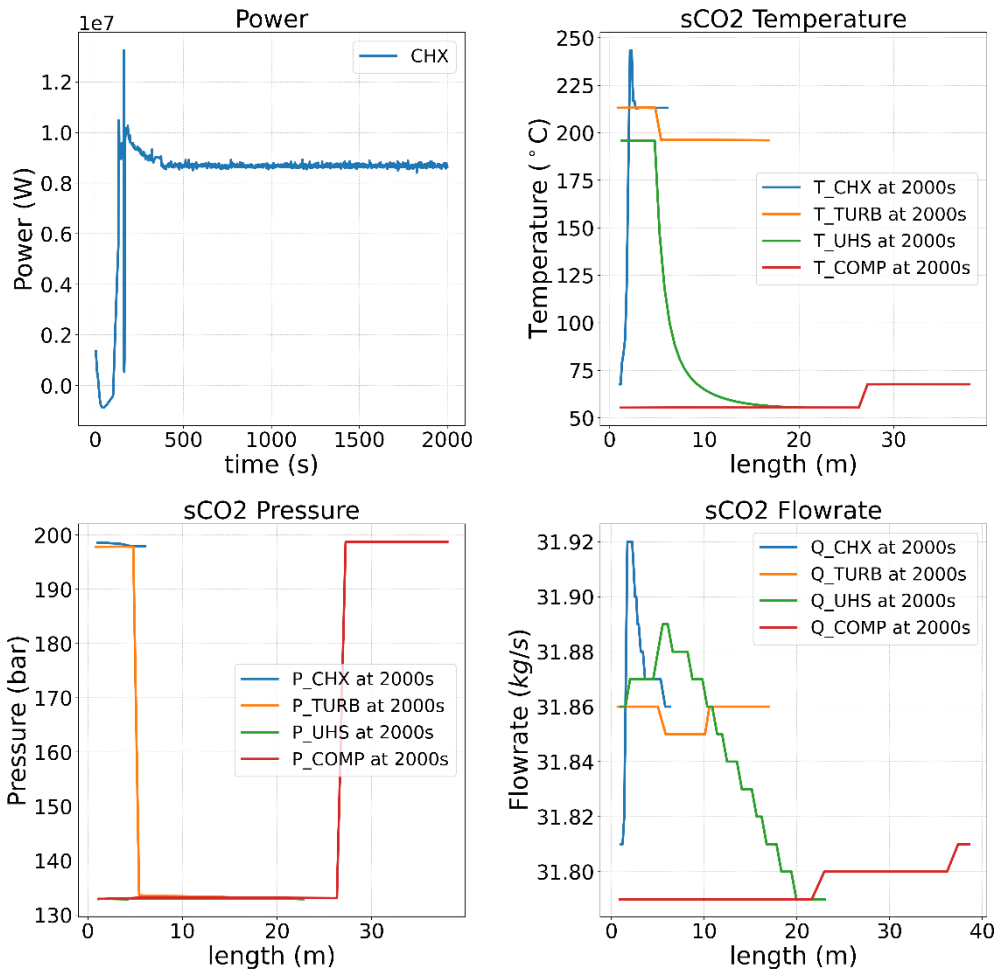

CATHARE3 RESULTS: EPR + SCO2 IN SBO SCENARIO

- Nominal thermal power of 4850 MW
- Automatic reactor shutdown:
  - Fall of the control rods
- High pressure (97 bar abs for 1 SG)
  - VDA (atmospheric discharge valve) opening
- Low level SG (narrow-range water level at 15%)
  - SCO2 opening
  - Closing of VDA

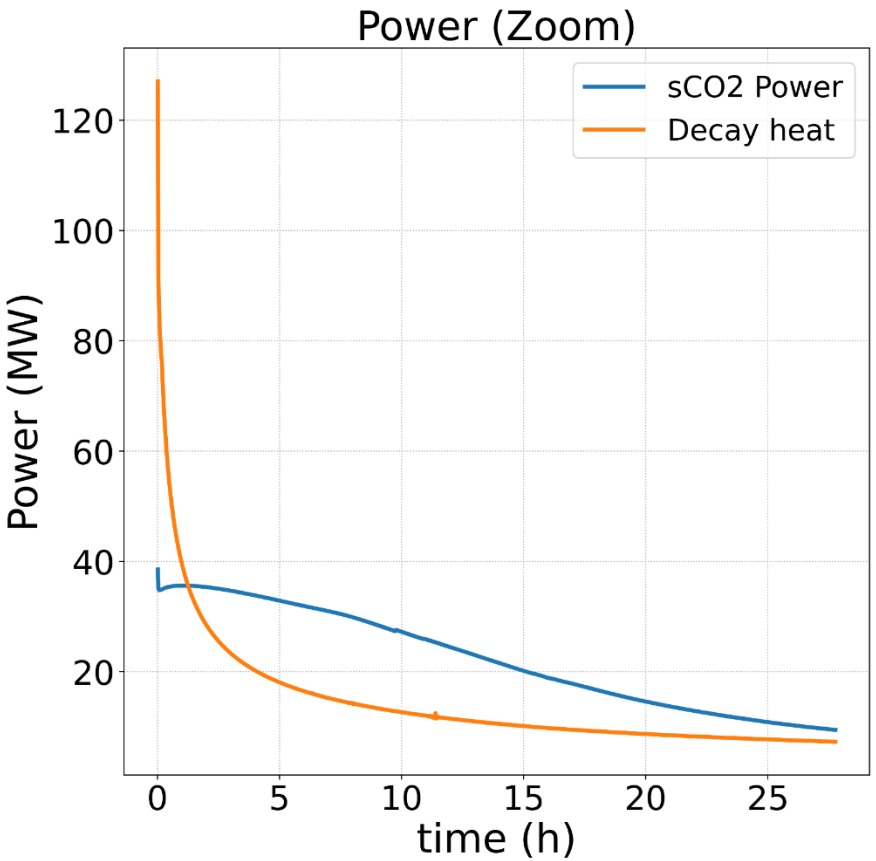

CATHARE3 RESULTS: EPR + SCO2 IN SBO SCENARIO

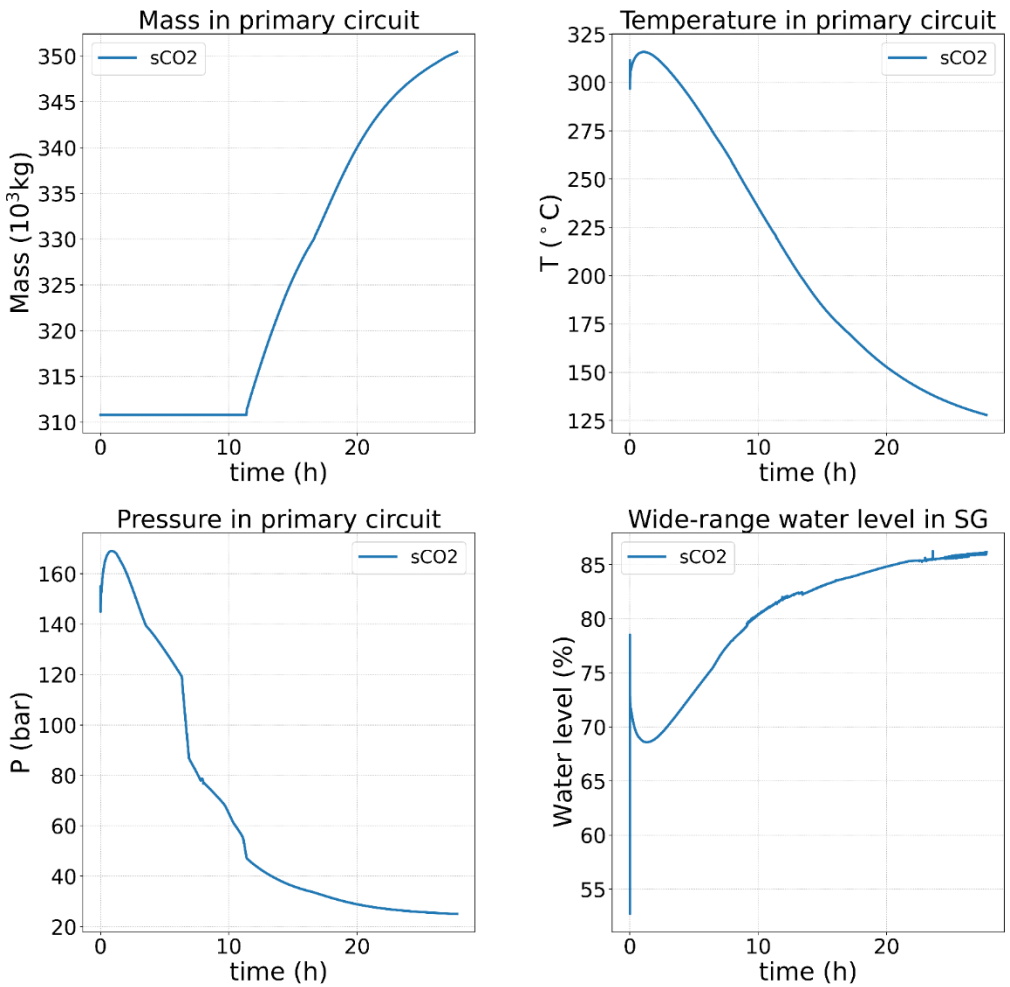

CONCLUSION / FUTURE WORK

- ATHLET conclusion
  - **A sCO_2 heat removal system with 4 CO_2 cycles** (total: 40 MW_{th}) **safely removes the decay heat for more than 72 h** (from a generic Konvoi PWR with 3800 MW_{th})
  - Results are independent of the heat exchanger type
  - Successful control strategies
  - Appropriate models
- Future Work
  - Further model validation
  - Further detailed simulations (e.g. failure of control systems)
  - Detailed analysis of start-up
  - Analysis of thermal and mechanical stress in components
  - Other applications of the sCO_2 heat removal system (e.g. for operational tasks)

CONCLUSION / FUTURE WORK

- CATHARE3 conclusion
  - The sCO_2 heat removal system safely removes the decay heat from a EPR PWR (4850 MW_{th}) with 4 loops (total: 40 MW_{th}) for more than 28 h in a SBO scenario

- Future work
  - Adapt removed thermal power to decay heat curve using regulations on shaft speed and successive shutdown of single sCO2 cycles?
  - Start-up modeling

PREPARATION TO INTEGRATION IN THE SIMULATOR

OBJECTIVES AND RESULTS

Objectives	Details
Fast running version of the sCO2 heat removal system for implementation in control logic of PWE simulator	Push-up start accessories partly included, the rest replaced by boundary conditions
	End of the push-up start period controlled by the compressor inlet pressure (this method shall be changed to speed criterion in a new FMU version of the Dymola sCO2 loop model)
	Push-up start method does not require continuous power consumption. On the other hand it tends to be complicated from different points of view (CO2 condensation during start-up period, for example)
	Tested in Dymola (D5.4)
	The first FMU version of the model delivered to KSG-GfS for test coupling with the Konvoi simulator
	The final FMU version of the model delivered to KSG-GfS in 06/2022. The model contains new UHS, system layout and start-up control but old CHX.

LESSONS LEARNED

- As the sCO2 system is not yet fully finalised (behaviour of components based on experiments, start-up mode, etc.), the models are based on plausible operating hypotheses but with uncertainties
- Regulation procedures for the sCO2 system, coupled to the reactors, need to be further improved
- The coupling with the power plant will be easier and more compact if it is done at the design stage
- First design proposal available which is feasible. Design improvements necessary for integration into existing NPP

sCO$_2$-4-NPP

Innovative sCO2-Based Heat Removal Technology for an Increased Level of Safety of Nuclear Power Plants

Validation in a virtual PWR

08.06.2022

REAL TIME SIMULATION OF sCO_2-LOOP ON PWR SIMULATOR

WP 6

P. Lasch, KSG

CONTENT

OBJECTIVES

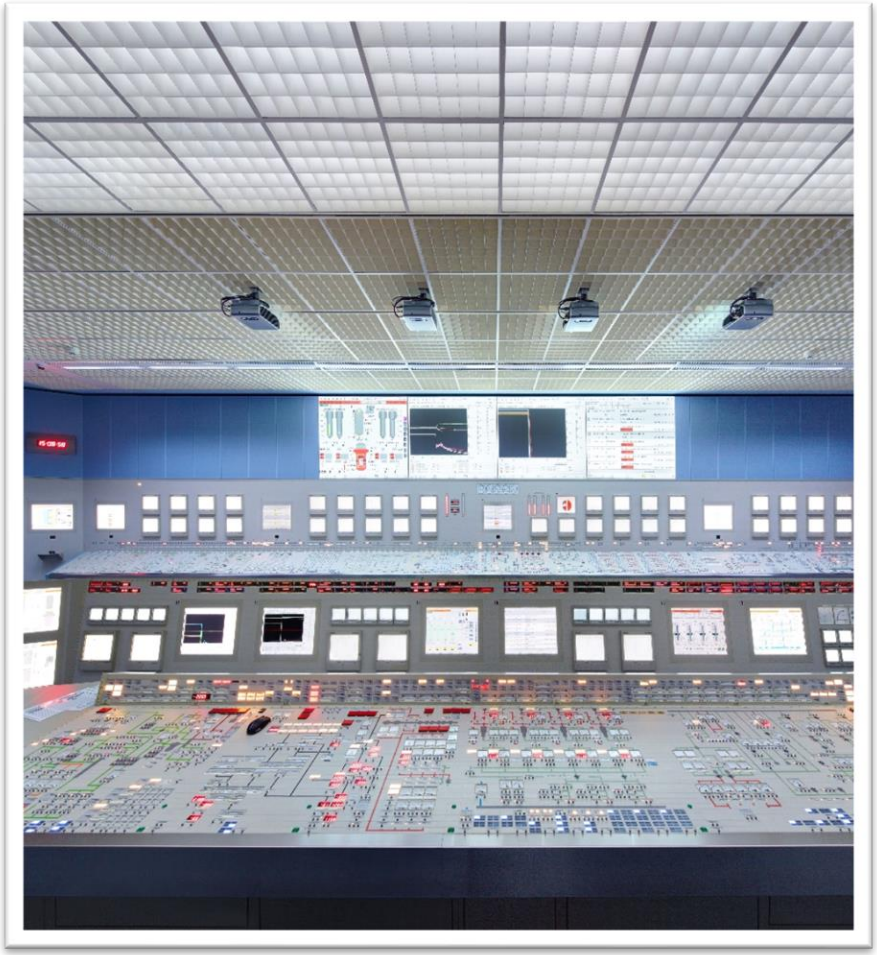

- Integrated the sCO2-Loop in a Full Scope Simulator
- Run transients in a fully integrated environment
- Verify the increased safety margins with the additional heat removal system

TECHNICAL SOLUTION

- A fast running model of the sCO2-Loop is developed by the project partner CVR using dymola
- This standalone model has been coupled with the existing simulator
- Interface between sCO2-Loop for thermodynamic properties and control scheme has been developed

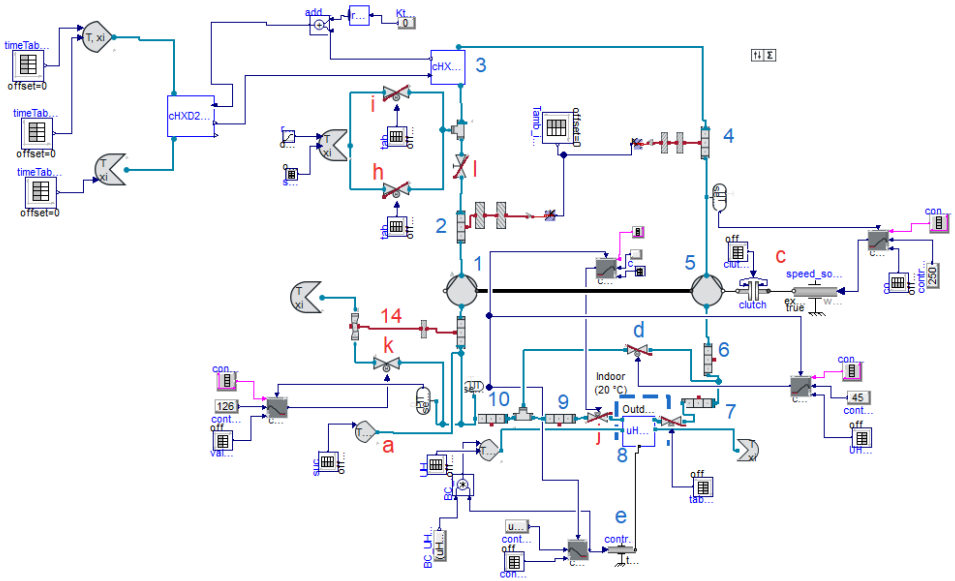

TECHNICAL SOLUTION

- The FMI standard (https://fmi-standard.org/) has been chosen to interface the CVR Model to the Full Scope Simulator
- All necessary Simulator commands (Run, Freeze, Snap, Reset) are included in the standard
- Standard was implemented in the Simulator environment and functionality has been tested successfully.

TECHNICAL SOLUTION

Dedicated Virtual Machine has been set up in KSG Datacenter to run FMU models

- CPU: 6 Cores, Xeon Gold 6144 CPU @ 3,49 GHz
- Memory: 16 GB.
- Disk: 250 GB.
- Network: 1x Gbit.

INTERFACE DEFINITION

- Coupling options:
  - Heat interface
  - Flow interface
- Models were connected at Main-Steam line and Steam-Generator sampling lines.
- Actual interface consists of 59 input and 51 output variables for thermodynamic properties, control parameters and display variables for each sCO2-Loop

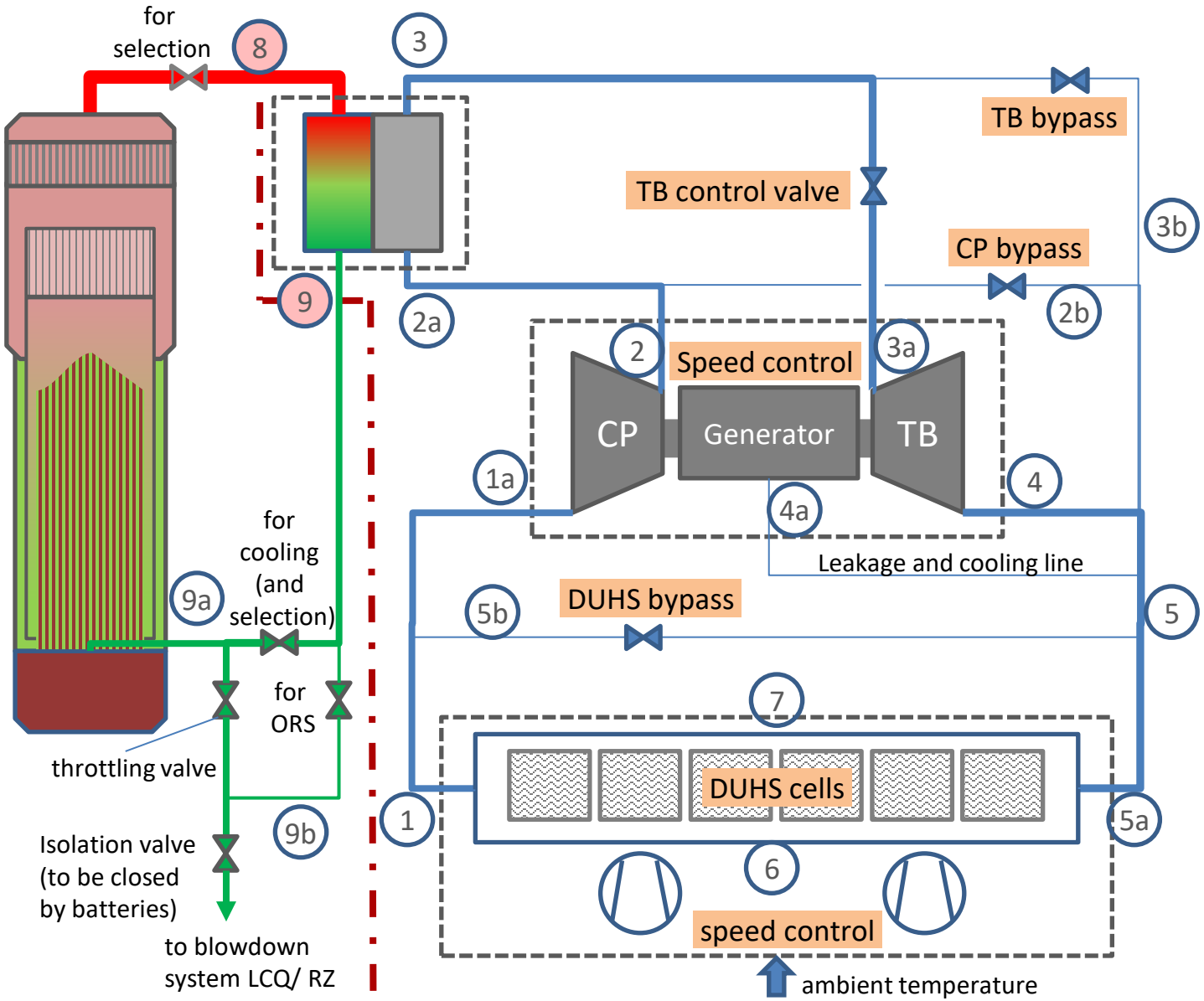

PROPOSED INTERFACE

Keeping functional units compact

INTERFACE DEFINITION

- Dedicated interface was implemented in the existing simulator

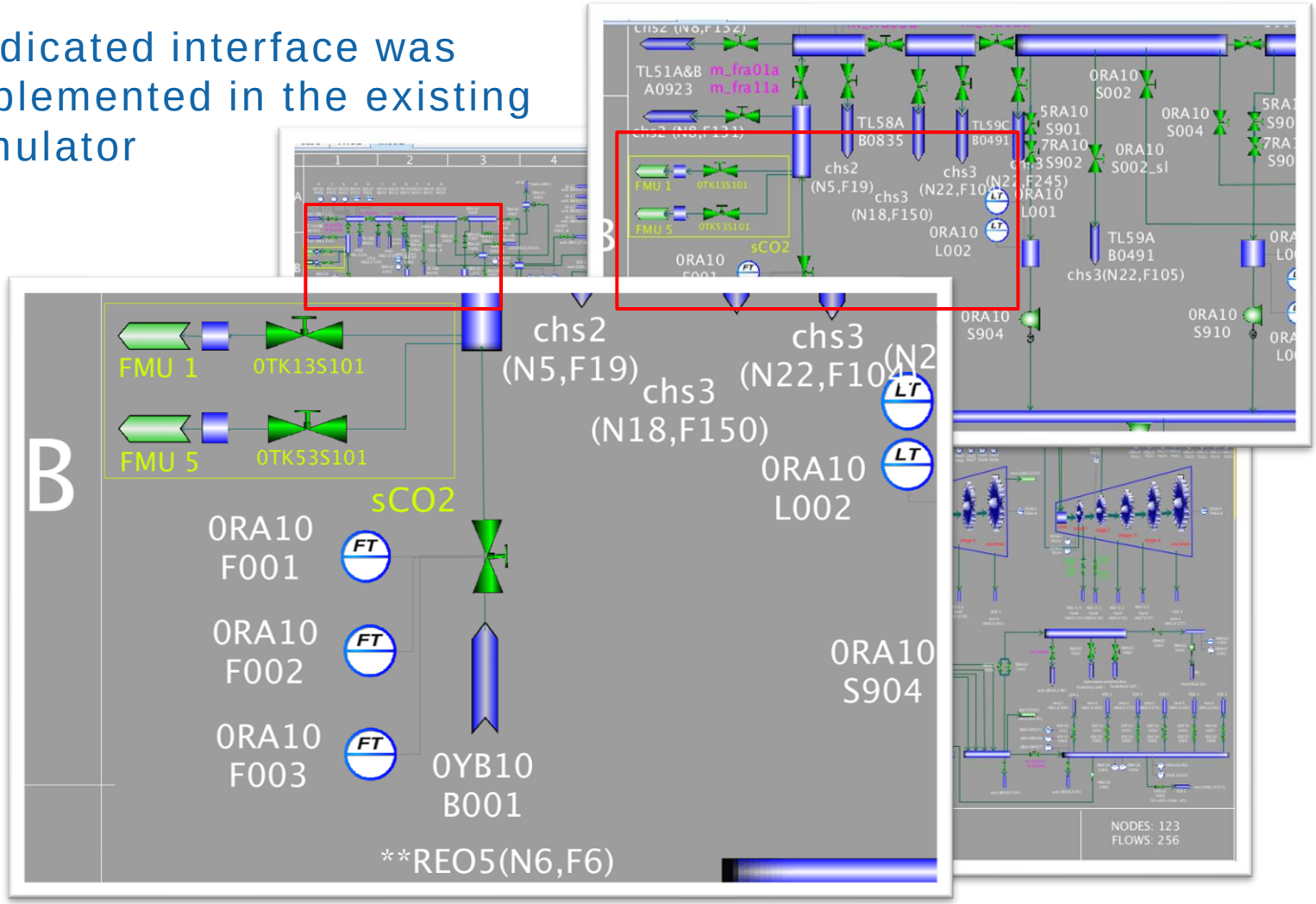

CHALLENGES

- High model complexity of sCO2-Loop in Dymola requires extensive computing power to run in Real-Time
- Coupled Code System needs numerical stable interface mechanisms
- Startup-Scheme as presented by CVR has been implemented
- Manual interaction needed to maneuver simulator in transients
- sCO2-Loop is Blackbox to Simulation

SIM DISPLAY

All Loop Overview

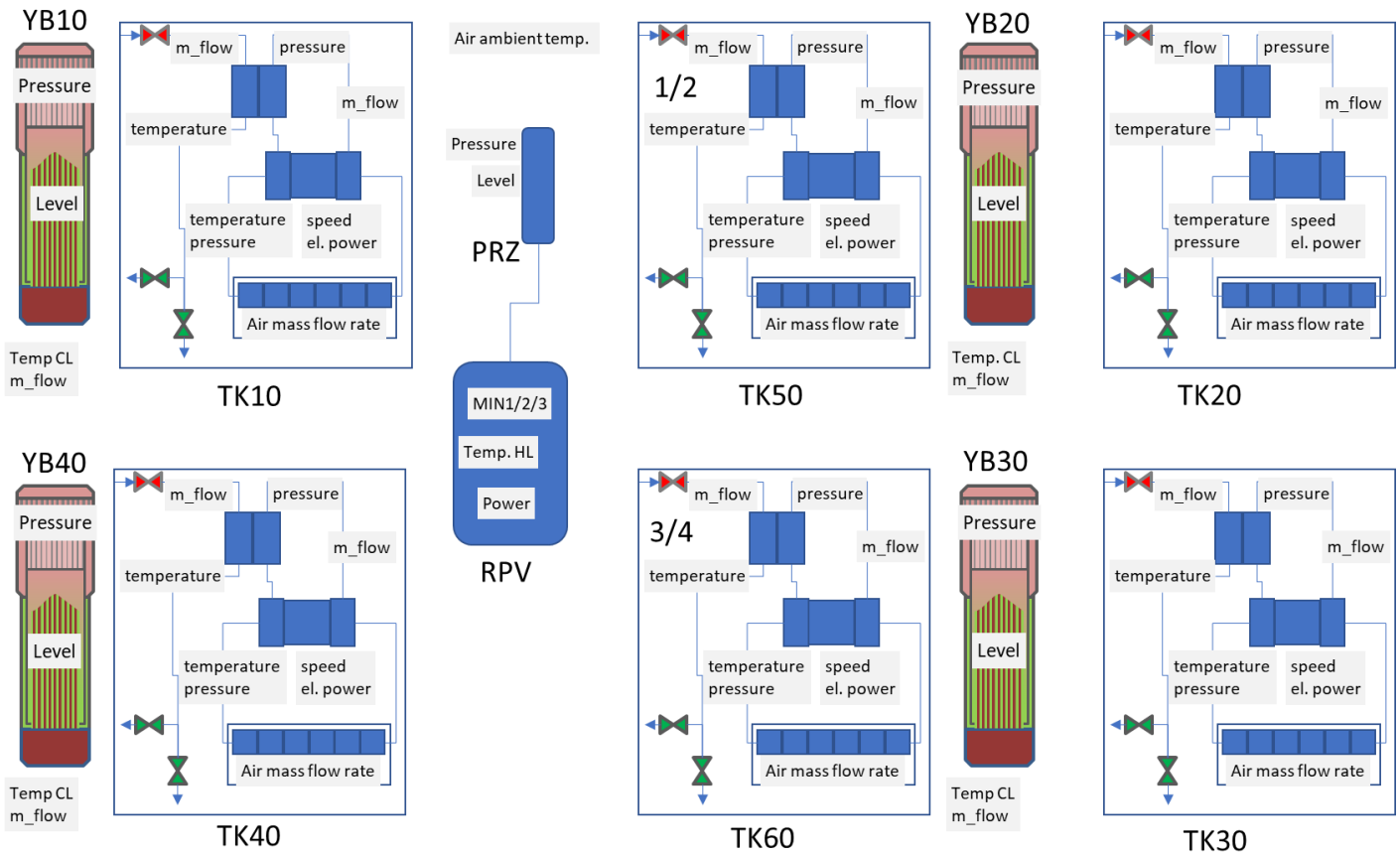

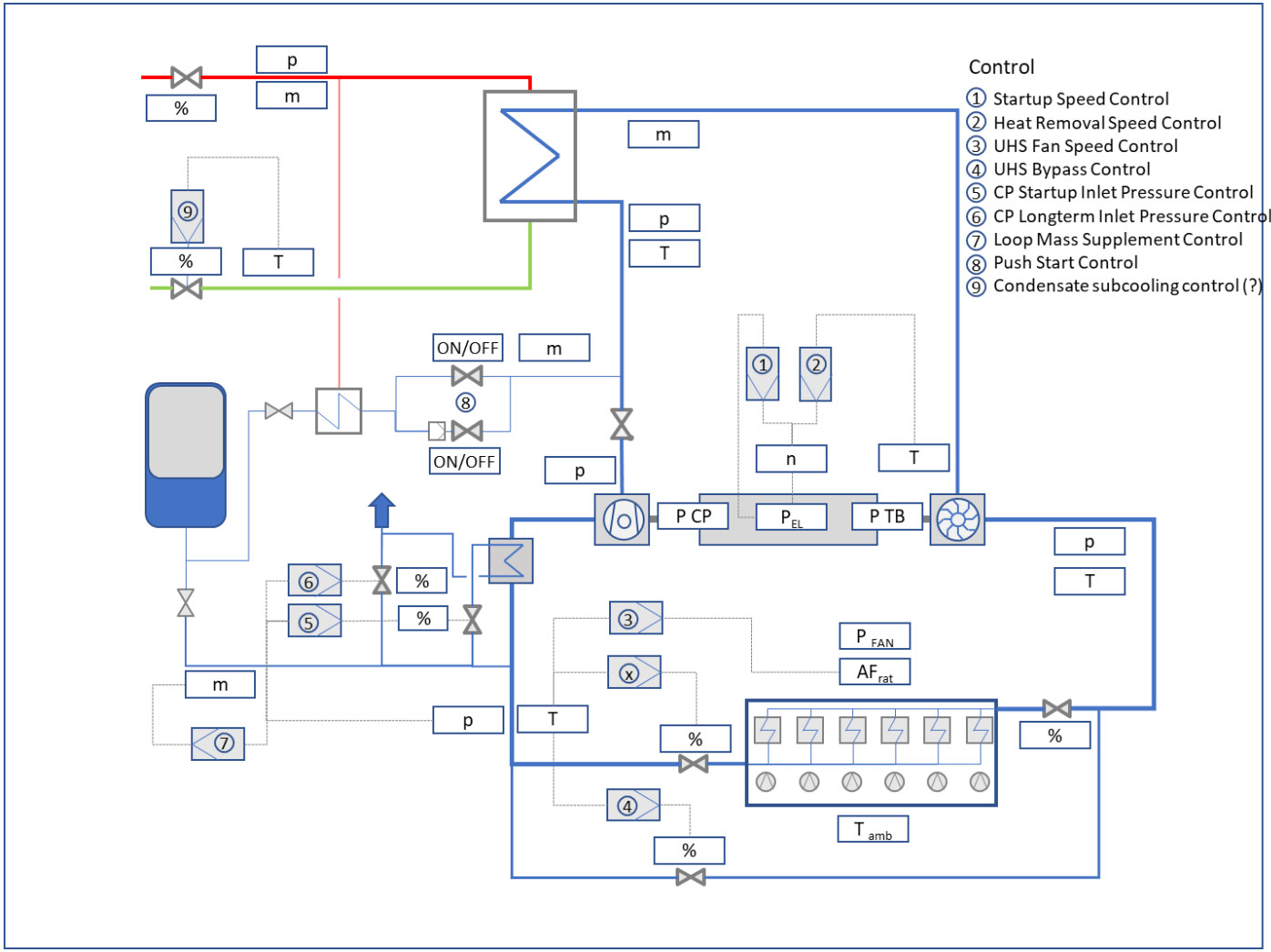

SIM DISPLAY

Single Loop

SUMMARY

- Integration of the sCO2-Loop was successfully achieved
- Numerical stability could be achieved
- Control scheme and maneuverability is working with some remaining issues

LICENSING REQUIREMENTS & REGULATORY FRAMEWORK

WP 3

JSI

CONTENT

1. INTRODUCTION

- Safety assessment is to be undertaken as a mean of evaluating compliance with safety requirements.
- Safety assessment is carried out for commissioning of the nuclear facility or modification of the design. Figure right show applicable requirements to be fulfilled, with special attention paid to defence in depth and quantitative analyses.

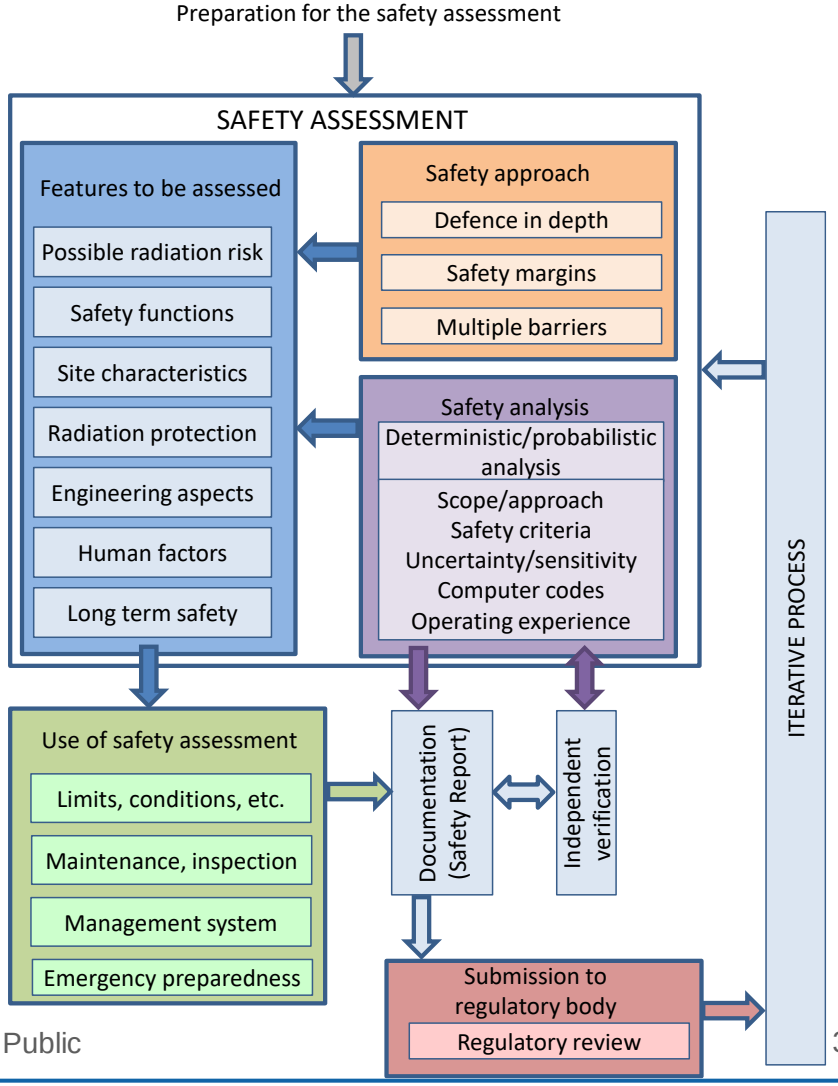

Adapted per FIG. 1 of IAEA GSR Part 4

2. IDENTIFICATION OF REGULATORY ELEMENTS (1/3)

Identification and description of the five levels of regulatory rules

Levels of rules	Description
I	**Level I: Legislation & safety regulations** • country legislation (examples of German, French and Slovenian) • WENRA Safety Reference Levels for Existing Reactors, 2014 (Issues C, E, F, G, K, Q) – WENRA RL, 2020: new Issue C
II	**Level II: IAEA (International Atomic Energy Agency) Safety Standards** • IAEA SSR-2/1 Rev. 1 Safety of Nuclear Power Plants: Design
III	**Level III: Nuclear process oriented documents** • Quality assurance • Design and operation
IV	**Level IV: Nuclear component oriented documents** • Pressure boundary codes and standards • Codes and standards for electrical equipment • Operations and maintenance codes
V	**Level V: Conventional codes and standards** • Usually applied to the structures, systems and components of conventional facilities • Conventional pressure vessel codes and standards

2. IDENTIFICATION OF REGULATORY ELEMENTS (2/3)

<u>Level II</u>: SSR-2/1 requires selection of applicable engineering design rules: Typical generic design requirements for systems

Typical generic design requirements for systems	Requirement applicability to safety category (Cat. 2 --> safety class 2 (SC2); Cat. 3 --> SC3
Single failure criterion	Not required for SC2 and SC3
Physical & electrical separation	Yes for redundant SC2 and SC3 equipment
Emergency power supply	Yes for SC2 and SC3
Periodic tests	Yes for SC2 and SC3
Protected against or designed to withstand hazard loads	Yes for SC2 and SC3
Environmental qualification	Yes for SC2 and SC3

Source: IAEA TECDOC-1787

2. IDENTIFICATION OF THE REGULATORY ELEMENTS (3/3)

Level IV example: pressure codes and standards and requirements for pressure retaining equipment

Safety Class	Safety classified pressure retaining equipment items	Code requirement
SC2	Components providing Cat. 3 functions with a safety barrier class 2	• ASME Code, Section III, Division 1, Subsection NC • RCC-M2
	Components providing Cat. 2 functions	• ASME Code, Section III, Division 1, Subsection ND • RCC-M3
SC3	Components providing Cat. 3 functions with a safety barrier class 3	• ASME Code, Section III, Division 1, Subsection ND • RCC-M3
	Components providing Cat. 3 functions unless specific codes and requirements are applied for specific reasons	Conventional codes like: • European Pressure Directive (PED) 97/23/EC • ASME Code, Section VIII, Div. 1 for pressure vessels • ANSI B31.1 for piping

Source: IAEA TECDOC-1787

3. REQUIREMENTS FOR REFERENCE PLANT MODIFICATIONS FOR INSTALLATION OF SCO2-4-NPP

Content:

- Nuclear industry potential need for modification
- Nuclear regulatory framework
- Safety general approach
  - Czech Republic
  - France
- Requirements for the structures, systems and components (SSCs)
  - Czech Republic
  - France
- Requirements for plant modifications

3.1 NUCLEAR INDUSTRY – POTENTIAL NEED FOR MODIFICATION

- Czech Republic (Dukovany and Temelín NPPs) - Stress Tests report from 2012 for Temelín NPP recommends measures to strengthen the levels of defence-in-depth in case of initiating events beyond design basis:
  - Implement diversified methods of cooling and heat transfer from the core and spent fuel storage pool.
- France - French nuclear fleet has an average age of more than 30 years. The French government has decided to relaunch the French nuclear industry in order to renew part of this fleet by Evolutionary Pressurized Reactor (EPR).
  - EPR reactor already have several active and passive systems, including core catcher – accidents with core melt incorporated into design.
  - EPR has an alternative heat sink too. Nevertheless, stress tests impose requirement on the implementation of “hard core”.

3.2 NUCLEAR REGULATORY FRAMEWORK

- Czech Republic (5 levels)

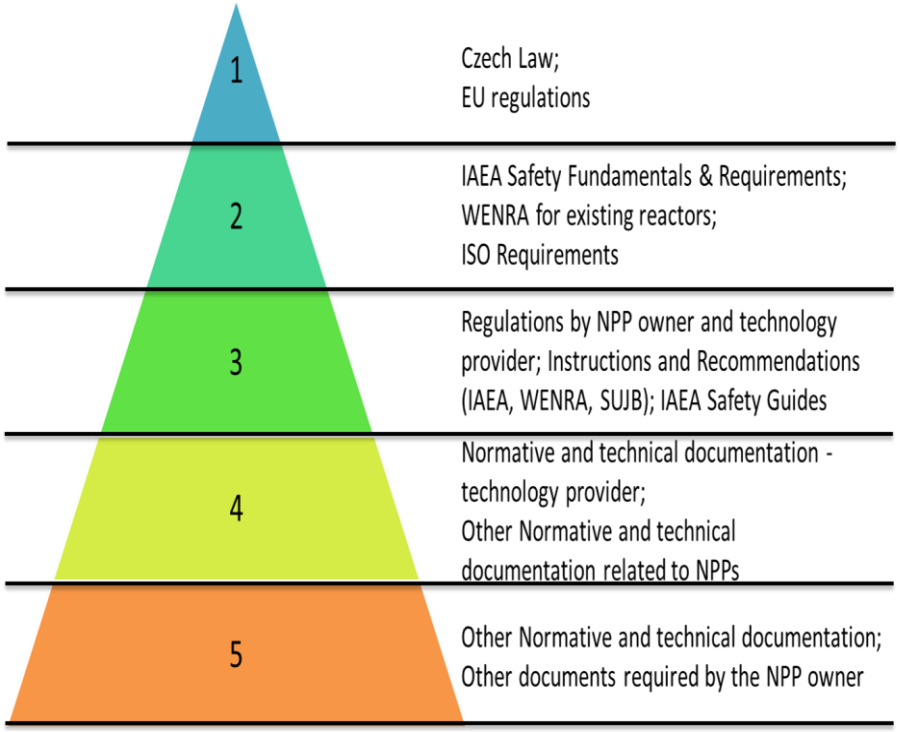

- France (7 levels)

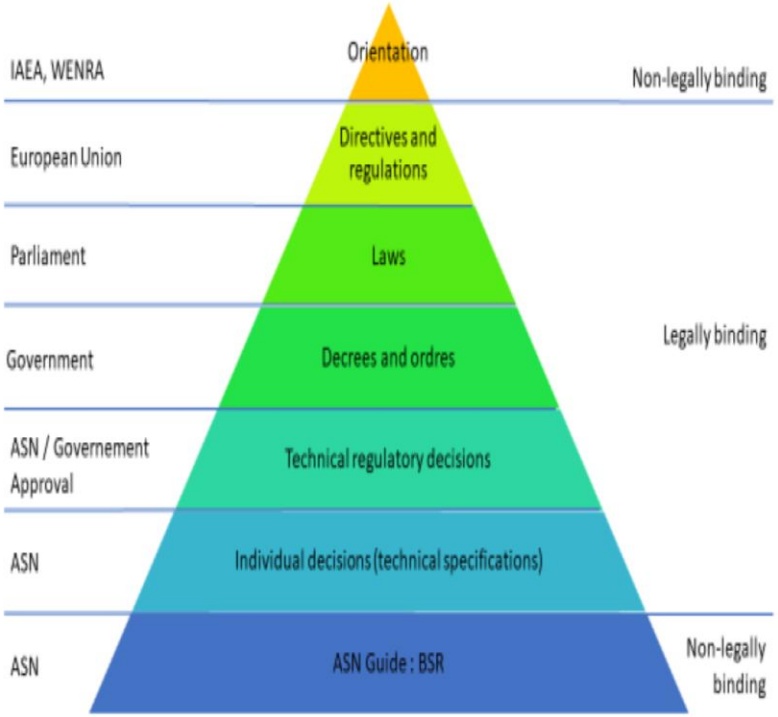

3.3a SAFETY GENERAL APPROACH - CZECH REPUBLIC (1/2)

- **Safety Analysis**
  - Must be performed at the stage of modification
  - Requirements based on IAEA SSG-2, rev. 1 (safety analysis); 329/2017 SÚJB (design); 162/2017 SÚJB (safety assessment)
  - Deterministic and probabilistic safety analysis – deterministic analyses for design extension conditions (DEC)
- **Defence in depth (DiD)**
  - DiD is the basic principle of nuclear facilities.
  - The design of a nuclear facility must set out requirements for structures, systems and components (SSC) and procedure to implement safety functions to protect the integrity and functionality of the physical safety barriers.
    - At various levels of DiD
    - The greatest possible degree of <u>independence of DiD levels</u>
    - DiD3b level is to manage DEC A and prevent the transition to DEC B.

3.3a SAFETY GENERAL APPROACH - CZECH REPUBLIC (2/2)

- **Plant states per decree 329/2017 SÚJB (design)**
  - DEC A (DEC without fuel damage)
    - Local complex transients – design basis accident (DBA) with subsequent failure of one or more safety systems
    - Global complex transients that may affect more units or whole nuclear power plant (NPP) – station blackout (SBO), loss of ultimate heat sink (LUHS) and combination of the above.
- **Acceptance criteria**
  - DEC A: mitigating DEC A and preventing DEC B (severe accident); limiting the radiation sequences

3.3b SAFETY GENERAL APPROACH – FRANCE (1/2)

- **Safety objectives to be achieved**
  - Objectives defined by WENRA in French nuclear regulations
    - O2 Accident without core or fuel meltdown
    - O4 Sufficient independence between levels of defence in depth
- **Safety requirements**
  - DiD
  - Four basic safety functions according to “INB Order”[1]
  - Three barriers (fuel cladding, primary circuit jacket, containment and associated isolation devices)
  - Safety general approach at design stage– deterministic approach based on the principle of DiD supplemented by probabilistic verification
- **Nuclear power plant (NPP) normal and accident conditions**
  - Design basis conditions (DBC): DBC1-5
  - Extended design domain: multiple failure and core meltdown operating conditions
  - Protection against internal hazard
  - Protection against external hazard

[1] rules relating to basic nuclear installations, known as the "INB order"

3.3b SAFETY GENERAL APPROACH – FRANCE (2/2)

- **Application to sCO2 system**
  - Be part of one of DiD level set up by the operator
  - Be developed in order to improve the response of operators to the second fundamental function (heat removal) and thus participate in the fourth function (radiation protection)
  - Do not interfere with containment barriers
  - Be developed following the same principles of the general operator safety approach

3.4a REQUIREMENTS FOR THE SSC – CZECH REPUBLIC (1/3)

- **Classification of safety functions**
  - **Category I** - the passive functions (properties) of the SSC of the primary circuit pressure boundaries,
  - **Category II** - safety functions with the highest requirements for reliability,
  - **Category III** - safety functions not included in categories I and II, which are substitutable for achieving the safety goals.
- **Classification of structures, systems and components (SSC)**
- SSCs for fulfilment of safety functions
  - SSC not affecting nuclear safety,
  - SSC with an impact on nuclear safety, which are not selected facilities
  - selected equipment (SSC), with the impact on nuclear safety
  - Safety classes
    - Safety class 1 (**BT1**) includes SSC fulfilling the safety functions of category I, which is the passive function of the SSC in the pressure boundaries of the primary circuit. Selected devices belonging to the pressure boundaries of the primary circuit, the damage of which does not threaten the plant safety, do not have to be included in safety class 1.
    - Safety class 2 (**BT2**) includes SSC fulfilling safety functions of category II.
    - Safety class 3 (**BT3**) includes SSC not included in safety class 1 or 2, fulfilling safety functions of category III.

3.4a REQUIREMENTS FOR THE SSC – CZECH REPUBLIC (2/3)

- **Classification of structures, systems and components (SSC) (cont'd)**
  - Seismic classification
    - **Category 1a** must retain full functionality, including integrity during and after the seismic event, up to the level of the maximum calculated earthquake (SL-2);
    - **Category 1b** requires seismic resistance in the sense of maintaining mechanical integrity; partial malfunctions are possible up to the level of the maximum calculated earthquake (SL-2);
    - **Category 1c** requires seismic resistance only in terms of seismic interactions with other structures, systems or partial components of the equipment, partial malfunctions and mechanical integrity are possible up to the level of the maximum calculated earthquake (SL-2);
    - **Category NC** (not classified)

3.4a REQUIREMENTS FOR THE SSC – CZECH REPUBLIC (3/3)

- The specific division of sCO2 components is following:
  - The part connecting the system to the steam generator including the closing valves will be classified as **selected equipment with safety class 2 (BT2)**,
  - The piping driving the water to the Compact Heat Exchanger (CHX) and the CHX itself will be classified as **selected equipment with safety class 3 (BT3)**,
  - The remaining parts of the system, including the Turbo-Compressor System (TCS) and the Diverse Ultimate Heat Sink (DUHS) will be classified as **not selected equipment and with no safety class (BT0)**.
- Safety function can be assigned to the **Safety category III**.
- SCO2 system regarding seismic classification can be assigned **Seismic category 1a**.

3.4b REQUIREMENTS FOR THE SSC – FRANCE (1/2)

- **Categorization of safety functions**
  - Safety Category 1 (**Cat 1**)
  - Safety Category 2 (**Cat 2**)
  - Safety Category 3 (**Cat 3**)
    - functions required to limit the consequences of a DEC A multiple failure condition;
- **Classification and requirements for SSC**
  - Safety Class 1 (**S1**) - a system or component required to perform a Cat 1 function; reactor vessel: main primary and secondary circuit
  - Safety Class 2 (**S2**) - a system or component required to perform a function at most Cat 2; a system or component that supports a Cat 2 function but whose failure does not immediately result in the loss of the supported function or whose operation is not affected by the initiating event or its consequences
  - Safety Class 3 (**S3**) - a system or component required to perform a function up to Cat 3; a system or component that supports a Cat 2 function but whose failure not immediately result in the loss…

3.4b REQUIREMENTS FOR THE SSC – FRANCE (2/2)

- **Safety requirements**

Condition of operation	Category of the function	Application of the SFC	Electrical back-ups	Sizing / Protection against external aggressions
DBC	Cat 1 / Cat 2	Yes	Yes	Yes
DEC-A	Cat 3	-	As per study	Yes
DEC-B	Cat 3	-	As per study	Yes
Internal aggressions	Cat 3	Yes	As per Aggression	
External aggressions	Cat 3	Yes	As per Aggression	

- **Application to sCO2 system**
  - In the case of French power plants, as for Czech power plants, the sCO2 system is part of Category 3 (**S3**) for the classification of SSCs, as it provides a Category 3 safety function.
  - The classification will allow to describe the requirements for the design, qualification and operation of the sCO2 system.

The decoupled design requirements associated with the Cat 1, Cat 2 and Cat 3 safety functions required for the **study** of DBC2-4, DEC-A, DEC-B operating conditions and for the study of internal and external hazards are presented in the table.

SFC – Single Failure Criterion

3.5 REQUIREMENTS FOR PLANT MODIFICATIONS (1/1)

- **Requirements for plant modifications (common to Czech Republic and France)**
  - Categorization of changes according to their significance
  - Responsibilities
  - Implementation of modifications
- **Specific to Czech Republic**
  - Safety assessment
- **Specific to France**
  - Description of modifications
  - Impact study
  - Safety report
  - Risk management study

4. DESIGN BASES FOR SYSTEMS AND COMPONENTS

Content:

- Requirements for design basis
- Requirements for qualification

4.1 REQUIREMENTS FOR DESIGN BASIS (1/4)

Requirements for design basis of SSC

Decay heat removal	Functions to be performed by the system
Station Blackout	Postulated initiating events
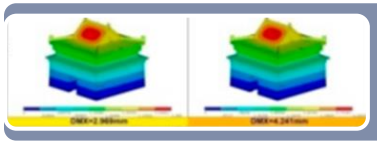	Loads and load combinations
	Protection against the effects of internal hazards
	Protection against the effects of external hazards
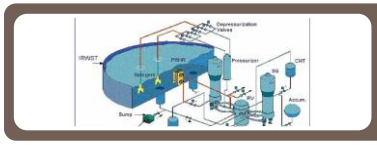	Reliability

4.1 REQUIREMENTS FOR DESIGN BASIS (2/4)

Pressure, stress	Design limits and acceptance criteria applicable to the design of SSC
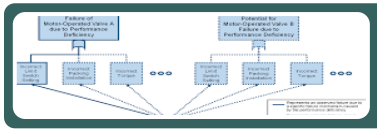	Provisions against common cause failures
Safety Class 3	Safety classification
Temperature, humidity	Environmental conditions for qualification
	Monitoring and control capabilities
316 grade stainless steel	Materials
Testing	Provisions for testing, inspection, maintenance and decommissioning

4.1 REQUIREMENTS FOR DESIGN BASIS (3/4)

- Functions - The sCO2 system will participate in the following three fundamental safety functions.
- Postulated initiating events (PIEs) - sCO2-4-NPP will provide a heat removal solution for Nuclear Power Plants that will increase the grace period in case of station blackout and loss of ultimate heat sink PIEs to beyond 72 hours.
- Load and load combinations - The sCO2 system and its components must be able to handle various loads and load combinations.
- Protection against the effects of internal hazards - The sCO2 system will need to be protected against internal hazard that could induce a DEC event for which the system would be required.
- Protection against the effects of external hazards - it will depend greatly on the location of the various modules of the sCO2 system.
- Design limits and acceptance criteria applicable to the design of SSC - The limit acceptance criteria for the sCO2 system will have to be determined from the power plant where the system is installed.
- Reliability (French case) - sCO2 system will have to be dimensioned to be able to accomplish its mission in the event of failure of one of the modules.

4.1 REQUIREMENTS FOR DESIGN BASIS (4/4)

- Provisions against common cause failures - This requirement is applicable to system as a whole (e.g. several modules of sCO2-4-NPP) and not to the components of the sCO2-4-NPP.
- Safety classification (French case) - Due to its function, the sCO2 system will have to be classified as safety equipment.
- Environmental conditions for qualification - The sCO2 system components are required to be qualified to perform their functions in the entire range of environmental conditions.
- Monitoring and control of the sCO2 system will be carried out by the Instrumentation and Control (I&C) architecture, which consists of several sub-systems and their associated electrical and electronic equipment.
- Materials - The materials used for the sCO2 system must be chosen taking into account their chemical composition and the phenomena to which they are likely to be subjected.
- Provisions for testing, inspection, maintenance and decommissioning In order to guarantee an adequate level of reliability during reactor operation, the sCO2 system shall be maintained under suitable conditions in order to be available and ready to operate correctly.

4.2 REQUIREMENTS FOR QUALIFICATION (1/2)

Requirements for qualification – Czech Republic

- The manner in which selected equipment and parts of selected equipment are designed, manufactured, and installed must be documented in a way that permits conformity assessment.
- Conformity assessment must be documented in conformity assessment documentation pursuant to requirements stipulated in Decree 358/2016.
- The manufacturer or importer must ensure, in compliance with conformity assessment procedure, that the selected equipment design meets the requirements of Decree 358/2016.

358/2016 Decree of 17 October 2016 on requirements for assurance of quality and technical safety and assessment and verification of conformity of selected equipment (Czech Republic)

4.2 REQUIREMENTS FOR QUALIFICATION (2/2)

Requirements for qualification - France

- Component and system qualification are two important points for the justification and validation of the use of a sCO2 system. Indeed, this qualification will feed the modification file and must be included in the operator's integrated management system.
- Testing qualification strategy:
  - The purpose of the qualification is to provide proof that the equipment meets all the requirements requested according to its classification, and according to the ambient and environmental conditions.
- Numerical qualification strategy:
  - To qualify the system as a whole, digital tools are used (numerical codes used for deterministic safety analysis and calculations such as probabilistic safety assessment (PSA)).
- Qualification quality requirements:
  - The nuclear field imposes rigor in the traceability from the design to the operation put in operation on site in order to be able to demonstrate at any time the respect of the requested requirements. Certain documents are analyzed by the nuclear safety authorities of each country using nuclear power.

5. REQUIREMENTS FOR TESTING AND OPERATION

Content:

- Czech Republic regulations for operation and maintenance
- French regulations for operation and maintenance
  - French requirements during operation
  - French requirements for maintenance, tests and shutdown

5.1 CZECH REPUBLIC REGULATIONS FOR OPERATION AND MAINTENANCE

Requirements for testing and operation of NPP systems in Czech Republic

Legislation (Act No. 263/2016 (Atomic Act), Decree No. 106/1998, Decree No. 214/1997 etc.)

Atomic act states: "limits and conditions mean a set of requirements, compliance with which means that the performance of activities [related to the use of radioactive materials] is considered safe".

Limits and conditions for Temelin NPP; Part A (1TL001; Limits and conditions) and Part B (1TL002; Limits and conditions – justification)

The philosophy of plant operation limits and conditions is consistent with NUREG 1431.

Requirements for operational tests of SSC according to plant Limits and conditions – primary circuit systems and auxiliary systems (1TC014/2)

Test of the whole system operability - 18 months.

Requirements for the operation of the specific system (e.g. 1TS133; Operation regulations for the emergency and normal primary system cooling)

Document to describe sCO2:

- Introduction
- System description
- System components
- System operation
- General system requirement.

5.2 FRENCH REGULATIONS FOR OPERATION AND MAINTENANCE

Principles of safety in operation for EDF, France

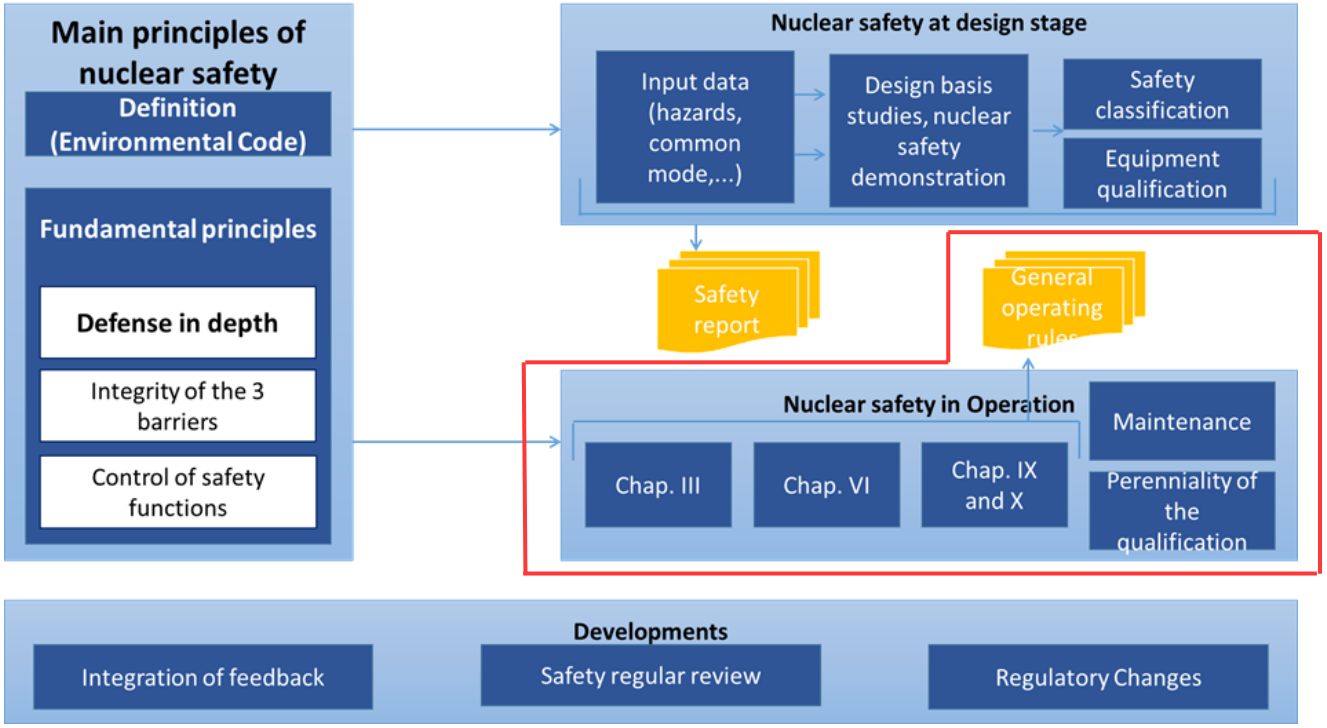

Chapter III describes the "technical operating specifications".

Chapter VI consists of procedures for operating the reactor in the event of an incident or accident.

Chapter IX defines the periodic inspection and test programmes for equipment and systems important to safety, implemented to verify their availability.

Chapter X defines the physical test programme for the reactor core.

5.2.1 FRENCH REQUIREMENTS DURING OPERATION

- Limits and conditions: For the sCO2 system, it will be necessary to ensure that the control system can be integrated into the control room of the power plant and to provide the necessary measurements for monitoring the system when it is operating.
- Maintenance during operation: In the framework of the sCO2 system, it will be necessary to define these rules to integrate them into the different documents (GOR, RQM and RSOME). As the system is not yet precisely and definitively defined, it is difficult to establish these rules at this stage.
- Tests during operation: In the context of the sCO2 system, start-up tests may be planned (in addition to more tests during the plant's shutdowns) and will then be integrated into the plant's GOR.

GOR - General Operating Rules, RQM - Requirements for Qualified Materials, RSOME - Rules for the Supervision in Operation of Mechanical Equipment.

5.2.2 FRENCH REQUIREMENTS FOR MAINTENANCE, TESTS AND SHUTDOWN

- Plant shutdowns: verification and maintenance programme.
- Maintenance during shutdown: The sCO2 system will be affected by the maintenance operations. The developers of the main components should therefore consider possible non-destructive testing in parallel with the development of the component.
- Tests during shutdown:
  - Commissioning tests: For the sCO2 system, commissioning tests will have to be performed to validate the proper installation and operation of the system after its installation.
  - Periodic tests: In the operation of the sCO2 system, it will be necessary to define the list of periodic tests that the system must undergo.

ROADMAP TOWARDS EXPLOTATION: REGULATORY POLICY, REQUIREMENTS AND WAY FORWARD

WP 7

Albannie Cagnac (EDF),

Andrej Prošek (JSI)

CONTENT

REGULATORY ROADMAP

- The purpose of the regulatory roadmap is to provide recommendations for future qualification and the necessary steps to achieve licensing of the sCO2-4-NPP system in future user countries to be able to integrate the real operating environment system in existing and future NPPs :
  - Equipment qualification (EQ)
  - Testing considerations
  - Equipment aging
  - Operating environment
  - Seismic qualification
  - Licensing requirements
  - Approval of safety authorities

EQUIPMENT QUALIFICATION (EQ) (1/2)

- Equipment qualification includes environmental and seismic qualification.
  - The safety function of a piece of equipment (electrical or mechanical or I&C equipment) is generally established in terms of its required behaviour (active or passive) and its duration.
  - The EQ is a process adopted to confirm that the system is capable of meeting, throughout its operational design life, the demands for performing its functions while being subject to the environmental conditions:
    - vibration, temperature, pressure, jet impingement, electromagnetic interference, irradiation, humidity or any likely combination thereof.

EQUIPMENT QUALIFICATION (EQ) (2/2)

- Environmental conditions to be considered include the variations expected in:
  - normal operation,
  - anticipated operational occurrences,
  - design basis accidents and
  - design extension conditions.
- Moreover, consideration shall be given to ageing effects caused by various environmental factors (such as vibration, irradiation and extreme temperature) over the expected lifetime of the equipment.
- The qualification programme shall replicate as far as practicable the conditions imposed on the equipment by the natural phenomenon, either by test or by analysis or by a combination of both.

TESTING CONSIDERATIONS (1/2)

- Service conditions include many considerations for equipment qualification:
  - environmental,
  - loading,
  - power, and
  - signal conditions

  expected during normal operation; expected abnormal extremes in operating requirements; and postulated conditions for design-basis events.

TESTING CONSIDERATIONS (2/2)

- Design-basis events can also be caused by natural phenomena such as an earthquake.
- Service conditions also include operating conditions such as self-heating, cycling, process fluid conditions, and electromagnetic interference.
- Qualification of equipment shall be accomplished by test, analysis, documented operating experience, or some combination of these methods. Type testing is the preferred method for qualification of equipment.

EQUIPMENT AGING (1/1)

- The aging of systems and components is a potential common cause failure mechanism.
- Equipment qualification testing for the effects of aging typically applies techniques that use accelerated aging methods on test specimens to simulate years of service under the expected operating conditions.

OPERATING ENVIRONMENT (1/1)

- The environment in which equipment operates (harsh or mild) and the consideration of seismic events plays a large role in determining the qualification process.
- Whether the equipment is classified as electrical or electromechanical or mechanical also influences the qualification process.
- For example, in a mild environment, the only design-basis event of consequence is a seismic event.
- Also mild environments are not considered to have significant aging mechanisms.

SEISMIC QUALIFICATION (1/1)

- Seismic qualification of safety-related equipment includes meeting both structural integrity and operability requirements under such conditions.
- For simple safety-related equipment, seismic qualification can often be done through analysis.
- For complex safety-related equipment, testing must be performed to show that the equipment meets these requirements under seismic conditions
- Mechanical aging is also a consideration in seismic qualification.
- The dynamic qualification of the equipment shall be achieved by testing, analysis or a combination of testing and analysis.

LICENSING REQUIREMENTS (1/2)

- WENRA reference level (RL) G4.1: The design of SSCs important to safety and the materials used shall take into account the effects of operational conditions over the lifetime of the plant and, when required, the effects of accident conditions on their characteristics and performance.
- WENRA RL G4.2: Qualification procedures shall be adopted to confirm that SSCs important to safety meet throughout their design operational lives the demands for performing their function, taking into account environmental conditions over the lifetime of the plant and when required in anticipated operational occurrences and accident conditions.

LICENSING REQUIREMENTS (2/2)

- Requirements for implementing EQ in nuclear power plants are prescribed by various national and international standards, codes and guides.
- For example, ASN Guide No. 22 tells us that equipment important to safety must be qualified to ensure its ability to meet its defined requirements for the conditions under which it is needed.
- The most commonly used industry standards that provide qualification requirements are developed by the Institute of Electrical and Electronics Engineers (IEEE) and the International Electrotechnical Commission (IEC).

APPROVAL OF SAFETY AUTHORITIES (1/1)

- Once the technology has been qualified, the operator who wishes to install the technology must have the approval of the national safety authority on which he depends.
- This approval is based on probabilistic safety studies, and deterministic studies confirming the improvement or non-degradation of reactor safety.

TECHNICAL ROADMAP

- Objectives of this roadmap
  - Define the next steps in technology development to reach a TRL 7-8 level
  - Identify the potential barriers to be overcome
  - Establish milestones for the components
  - Establish the test program that will enable the qualification process to be carried out and uncertainties to be reduced

TECHNICAL ROADMAP - EQUIPMENTS

- Heat Exchangers :
  - New design (patent) - Improvement of the design to improve certain parameters (maximum temperatures, heat transfers...)
  - Experiments for reliability studies and reduction of calculation uncertainties in modeling
  - Development of new non-destructive testing and monitoring methods
  - Maintenance roadmap to establish
- Turbocompressor
  - Construction of a prototype at scale 1
  - Experiments to study behavior at limit conditions, a detailed analysis of reliability and potential failures,
  - Optimization of materials and some sub-components (bearings...) to increase reliability
  - Regulation, monitoring and non-destructive testing procedures.

TECHNICAL ROADMAP – SCO2 SYSTEM

- Testing of possible start-up procedures
  - Currently: push-up start-up solution with storage tanks,
  - Other potential solutions: readiness state of operation, start-up with pressurizer
  - Establishment of advantages and disadvantages and integration in a NPP simulator
- Operating rules
  - Establishment of monitoring procedures, performance monitoring for an operator
  - Establishment of maintenance procedures (periodic tests, periodicity of visits…)
- Safety studies
  - Functional analysis
  - Reliability analysis of the entire sCO2 system, Integration in PSAs
- Qualification
  - Establishment of qualification file documents
  - Contact with the relevant organisations

FINANCIAL ROADMAP

- Establishing a financial roadmap seems to us to be important for 2 aspects:
  - To guarantee an sCO2 system at a controlled price
  - Seek to finance the remaining necessary developments
- Objective 1: Controlling the final cost of the sCO2 system
  - Need to demonstrate a concrete contribution of the system to the safety of the NPP
  - Selection of the most suitable materials compatible with the qualification requirements
  - Design as modular as possible.
    - Optimise the cost of installation and possible modifications related to the types of reactors on which the system will be installed.
    - Better control to integrate modifications/customisations required for the type of reactor.
    - Establishment of maintenance and operating procedures for an estimate of OPEX costs

FINANCIAL ROADMAP

- Objective 2: To finance further work on the sCO2 system
  - In the absence of a full-scale pilot, the sCO2 system will not be able to reach TRL 8 level
  - Collaborative Research Projects (with public funds)
    - Further simulation studies could be carried out within the framework of a collaborative research project,
    - Involvement of industrial partners and mastering the processes related to the engineering phases of the design of nuclear solutions, qualification and installation files for nuclear power plants.
  - Create a real community around this solution and integrating non-nuclear stakeholders, but interested in another application

SUMMARY

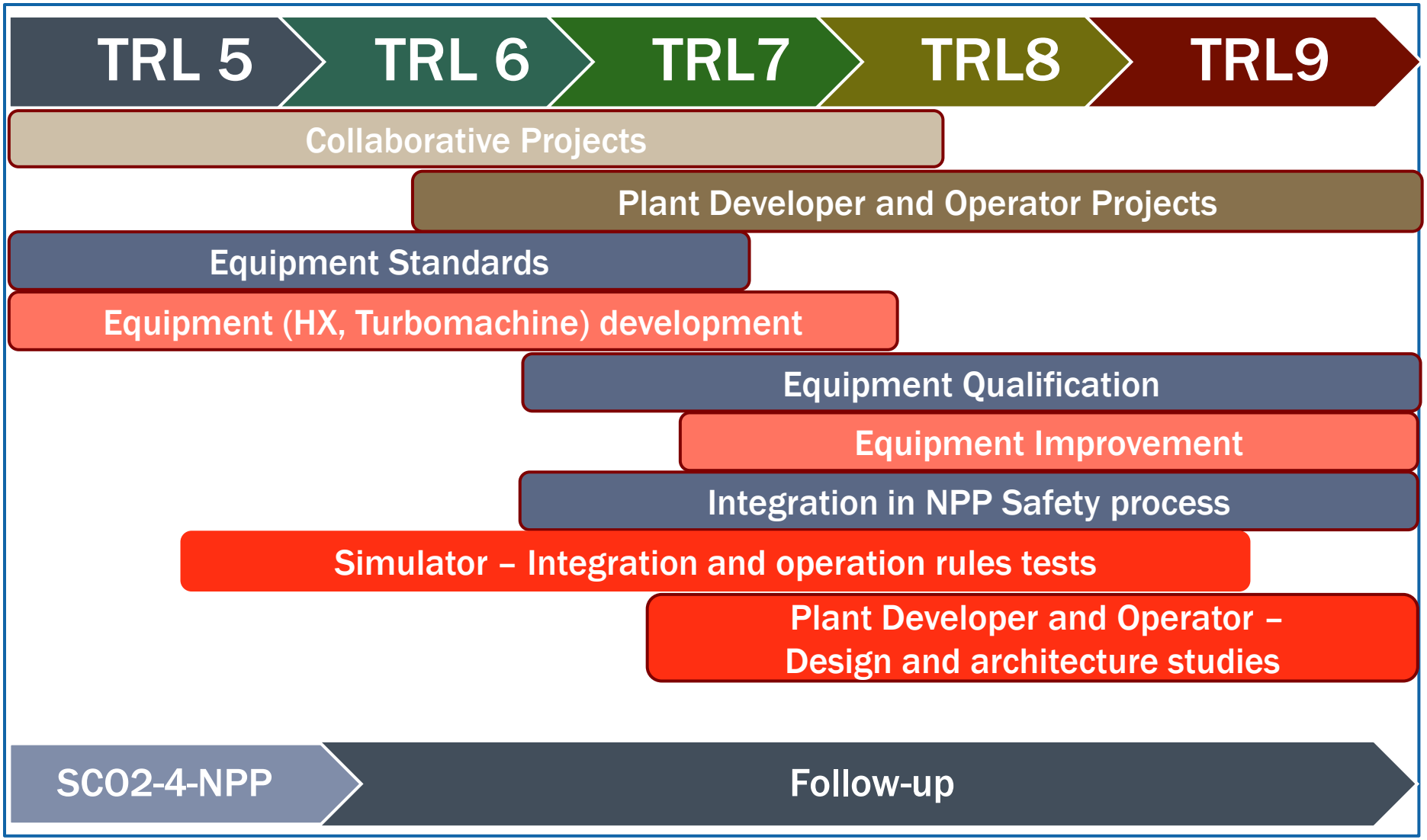
TRL 5
TRL 6
TRL7
TRL8
TRL9
Collaborative Projects
Plant Developer and Operator Projects
Equipment Standards
Equipment (HX, Turbomachine) development
Equipment Qualification
Equipment Improvement
Integration in NPP Safety process
Simulator – Integration and operation rules tests
Plant Developer and Operator – Design and architecture studies
SCO2-4-NPP
Follow-up

THANK YOU

This project has received funding from the Euratom research and training programme 2014-2018 under grant agreement No 847606. This text reflects only the author's views and the Commission is not liable for any use that may be made of the information contained therein.